Santiago 2013 Microgrid Symposium
(2013/09/11-12)

Compensation for PV and Wind Fluctuation

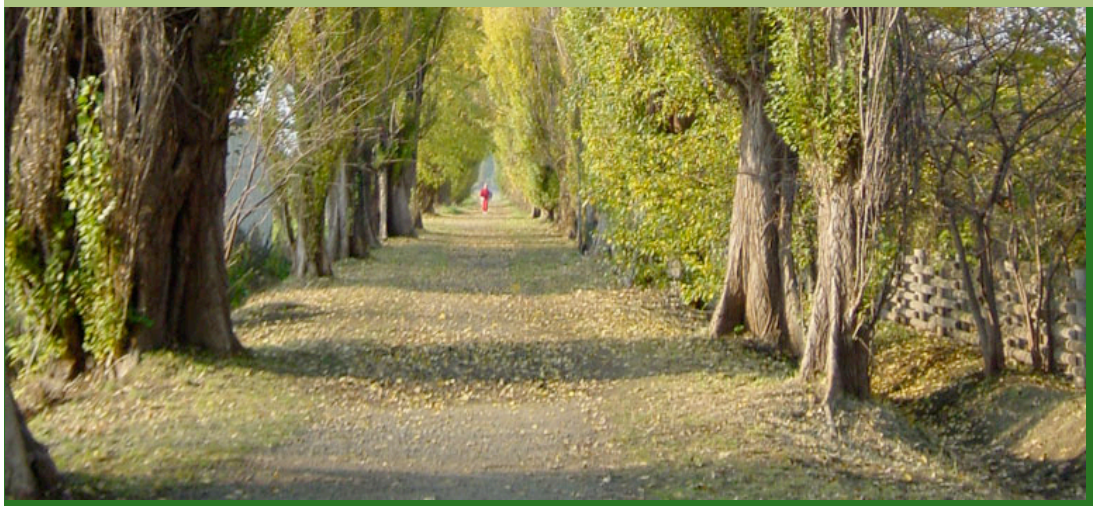

北海道大学大学院情報科学研究科
原　亮一

HOKKAIDO UNIVERSITY

Why RE generations in Japan?

- For low carbon society
  - Alternatives to oil-, coal-, and gas-fired thermal power plants
- For energy security enhancement
  - Massive amount of energy
  - Domestic resources

- Attractive Feed-In Tariff (FIT)
  - Photovoltaic(PV): 37.8¥/kWh (0.374$/kWh)
  - Wind Turbine(WT): 23.1¥/kWh (0.229$/kWh)

Why “not” RE generations in Japan?

- Fluctuation
  - Fluctuation range: >60%(PV), 100%(WT)
  - Japanese power systems are small and tied weakly

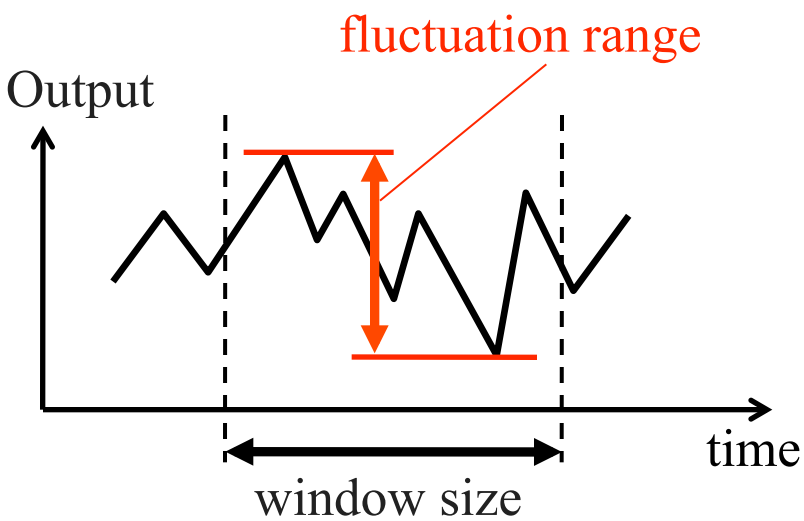

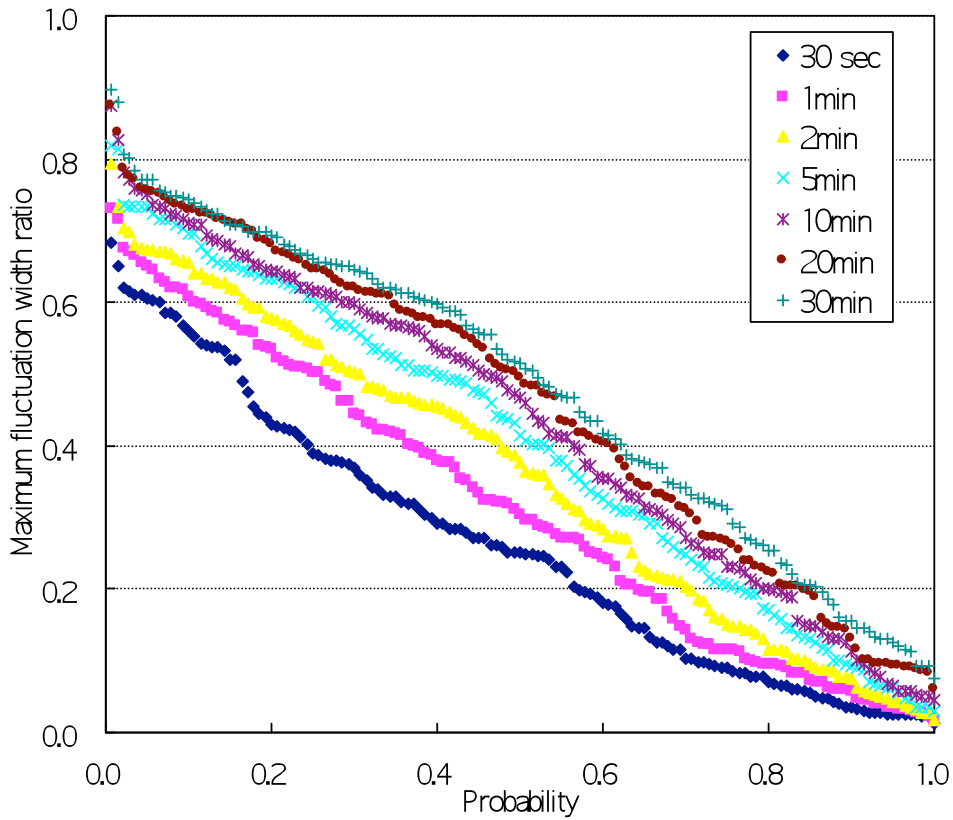

Why “not” RE generations in Japan?

- Intermittency
  - Utilization factor: 12%(PV), 20%(WT)

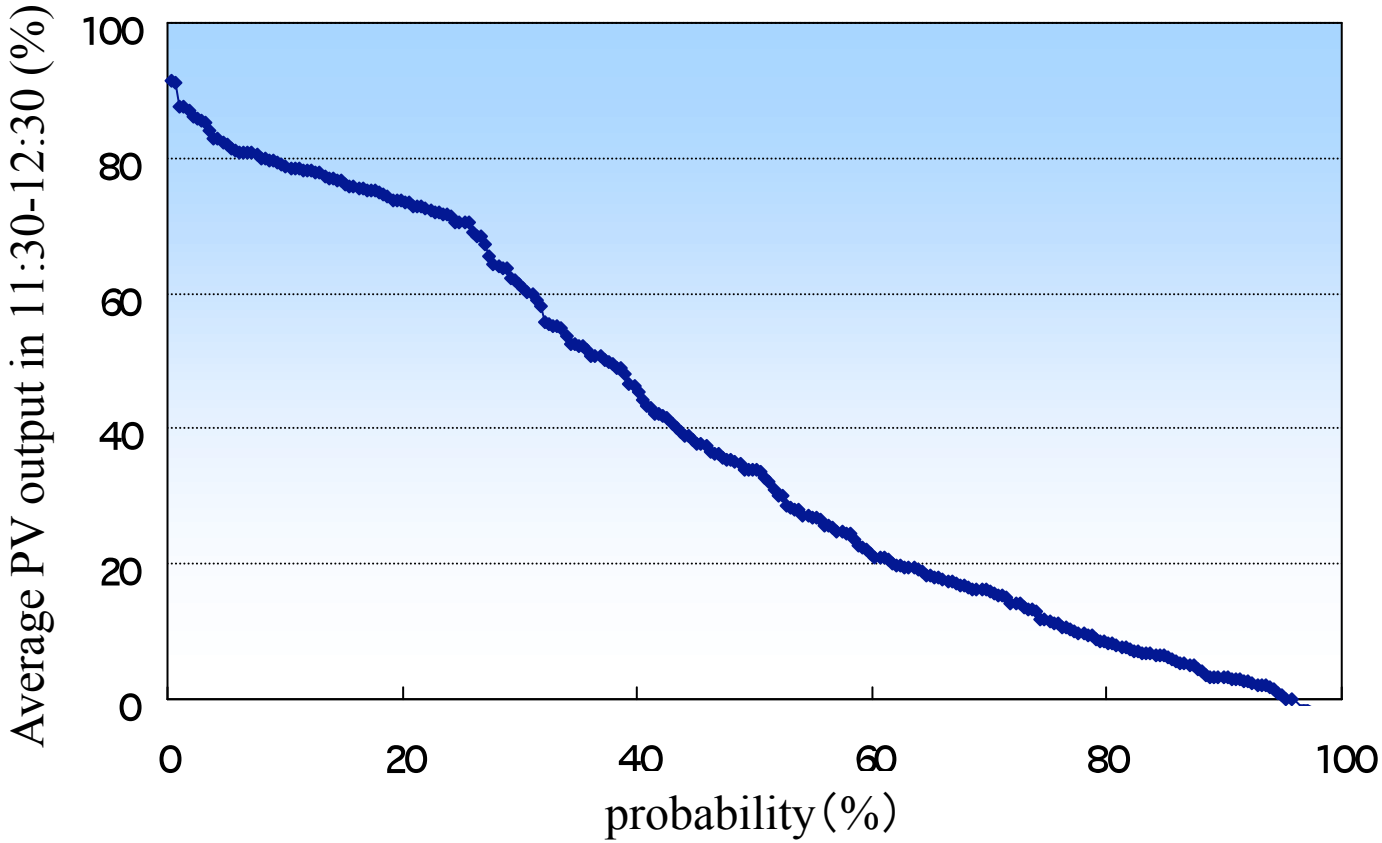

Why “not” RE generations in Japan?

- Hard to forecast
  - PDF of daily error of PV output forecast

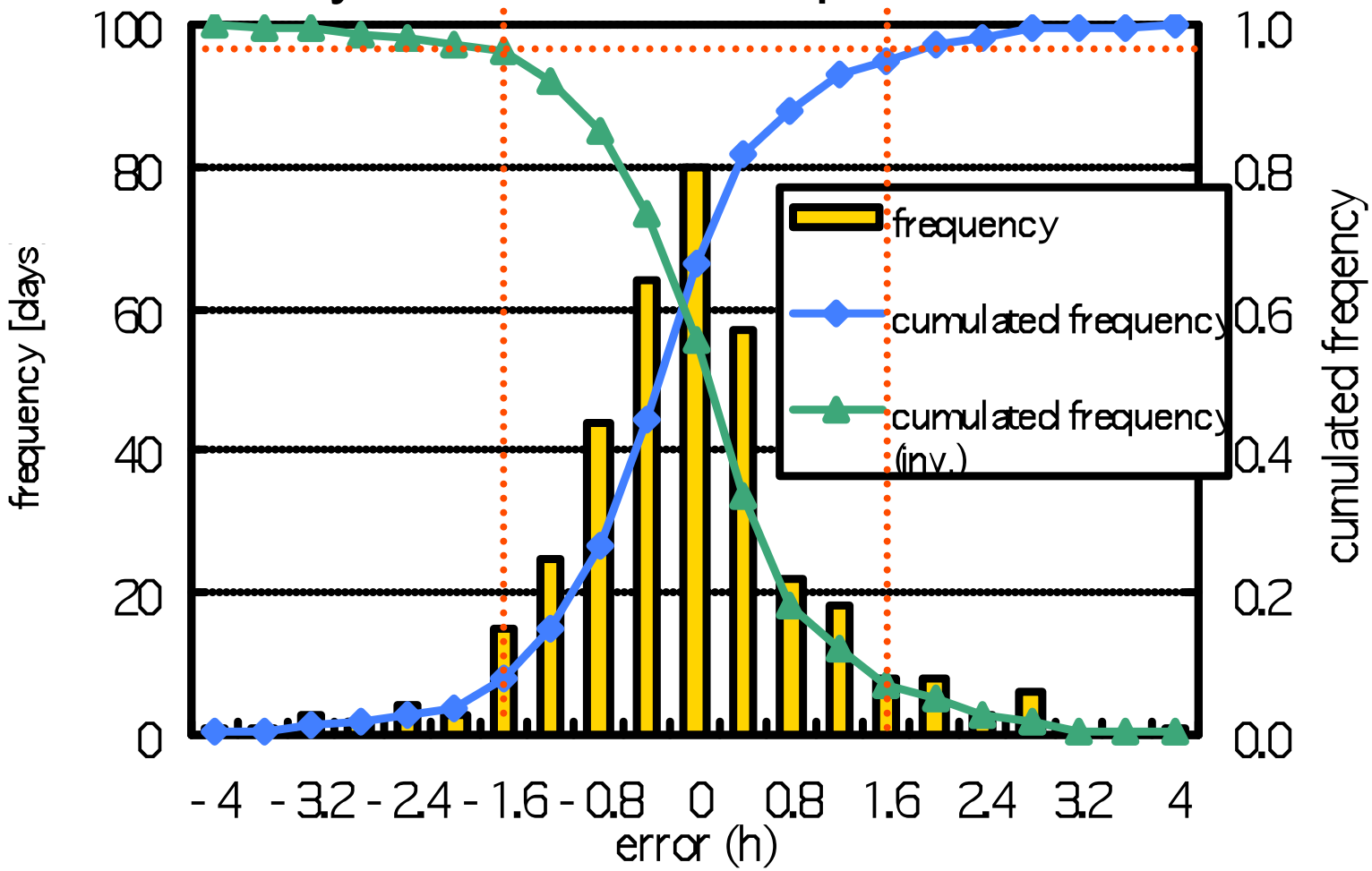

Application of Energy Storage Systems (ESS)

➢ Output Smoothing

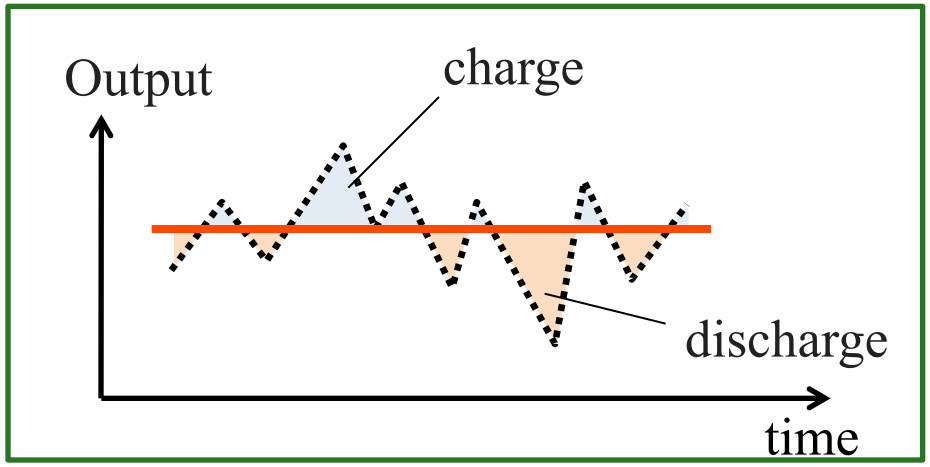

➢ Scheduled Operation

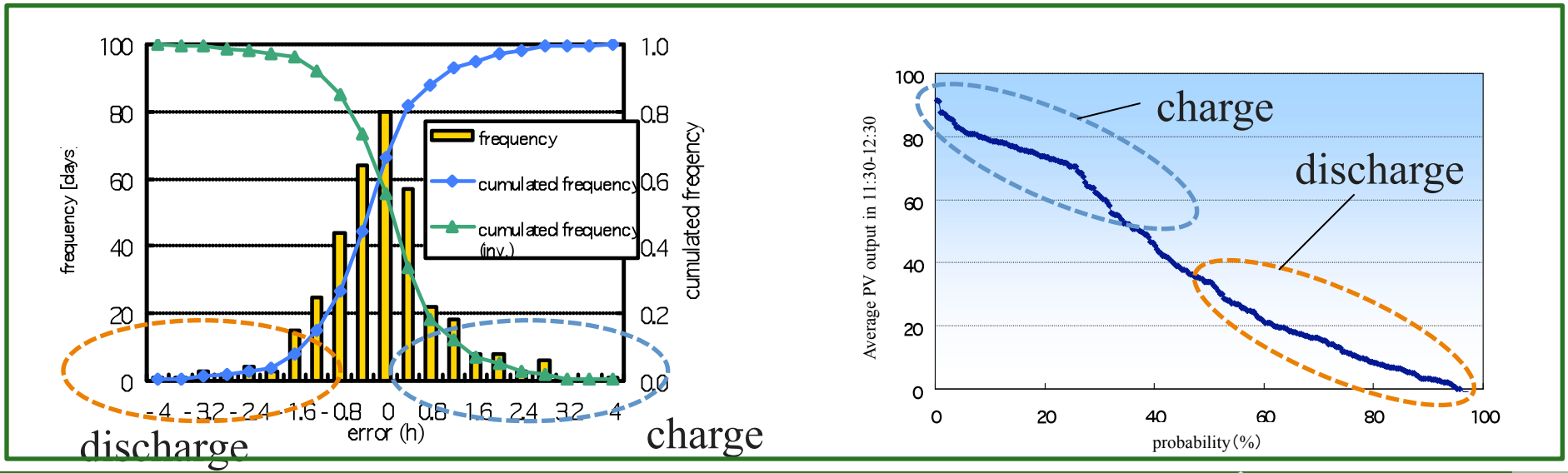

Wakkanai Mega-Solar project

Promoted by New Energy and Industrial Technology Development Organization (NEDO) in FY2006-2010

Conducted by:
Wakkanai city, Hokkaido Electric Power Co., Ltd, Meidensha Corp.,
Panasonic Environmental & Air-conditioning Engineering Co., Ltd. Japan Weather Association, and Hokkaido University

System configuration

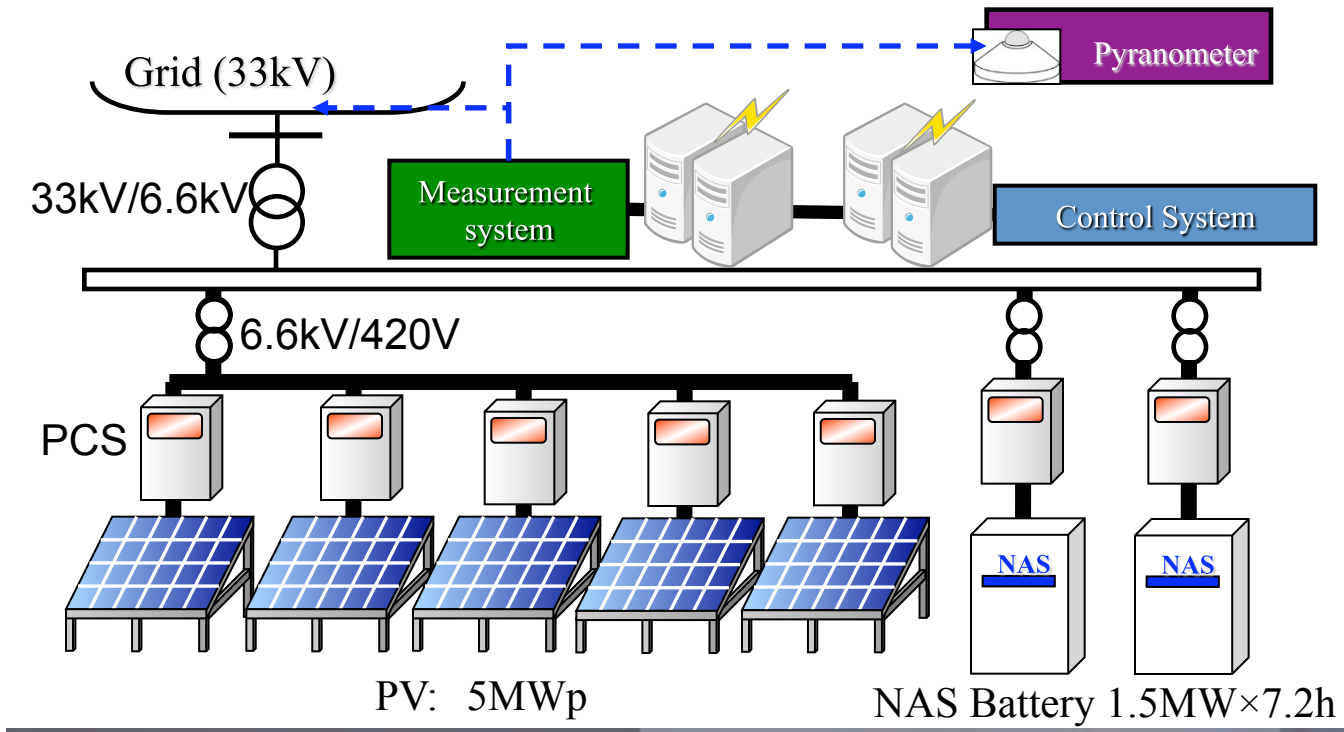

Output smoothing

- Idea

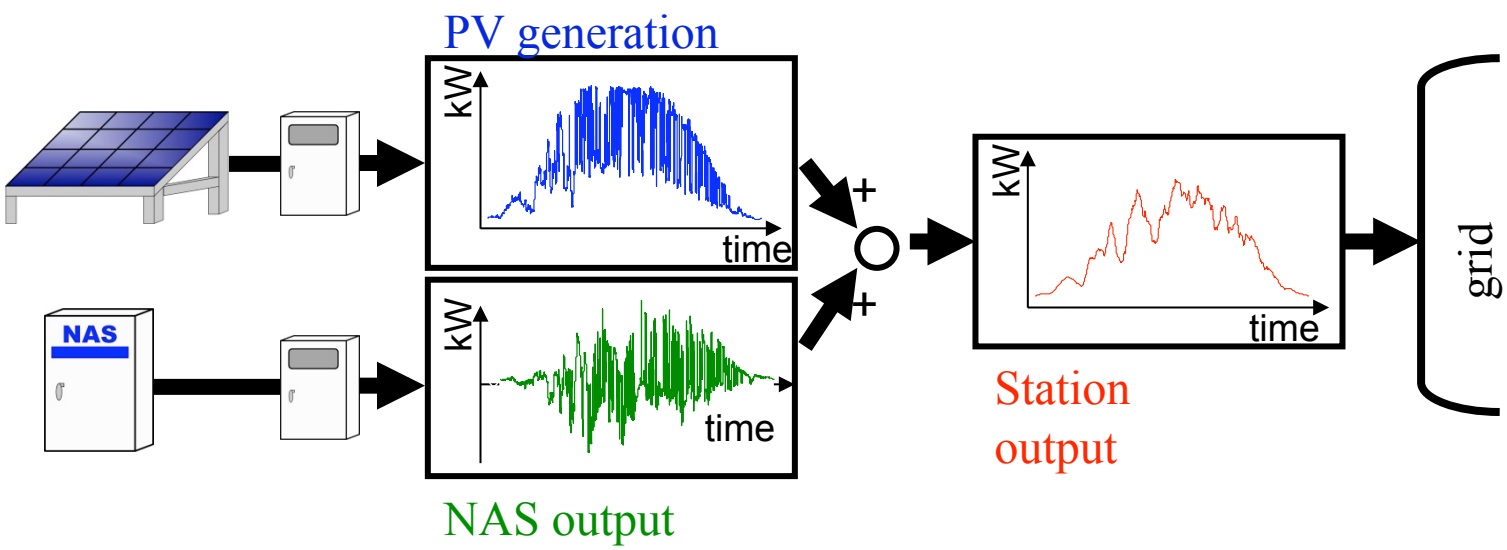

- Implementation

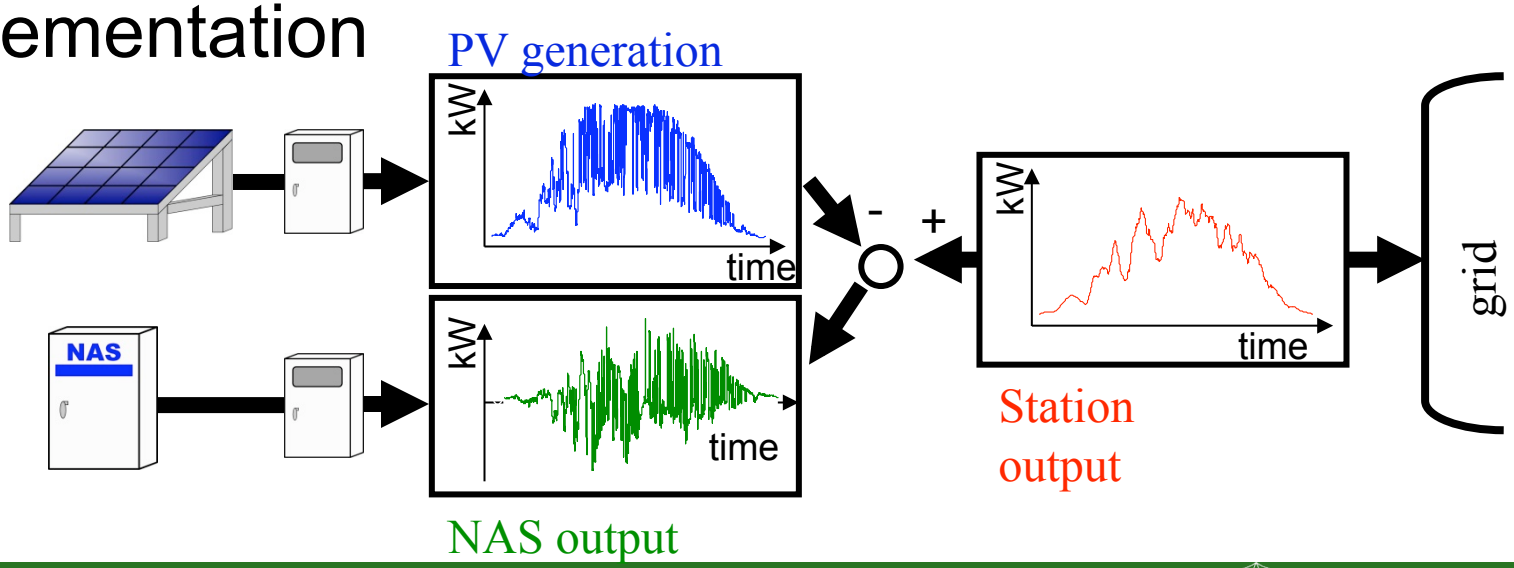

Developed control system

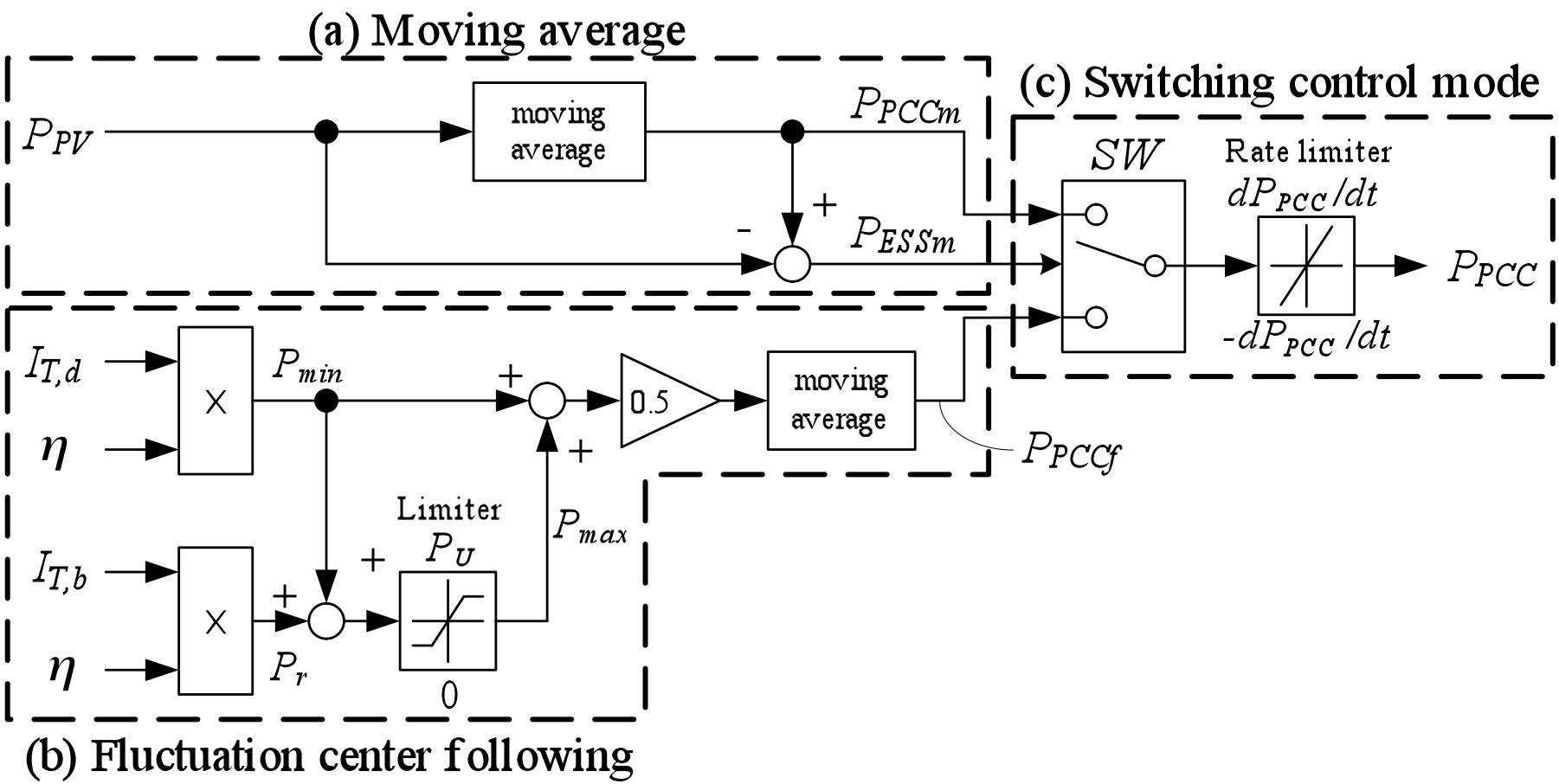

For small fluctuation >> Moving Average（MA)

For large fluctuation >> Fluctuation Center Following（FCF）

Principle of FCF

Center of fluctuation is estimated from the short-term maximum irradiation and the short-term minimum irradiation

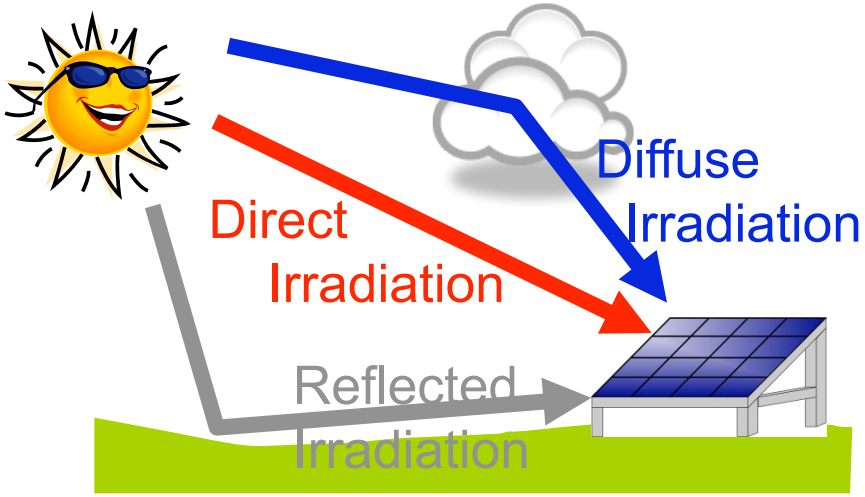

Direct irradiation varies larger

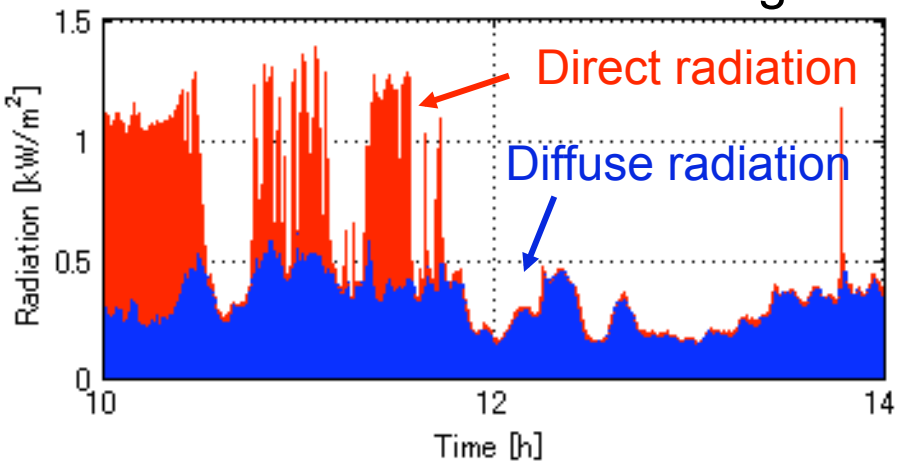

Short-term minimum irradiation :

monitored diffuse irradiation

Short-term maximum irradiation :

maximum direct irradiation estimated by the Bourguer model

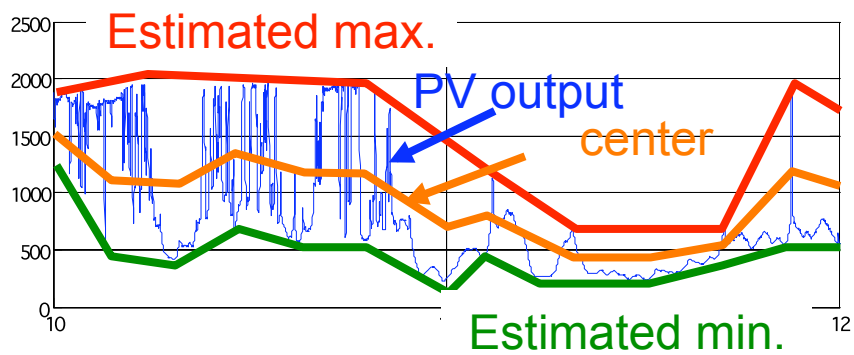

Example field test result

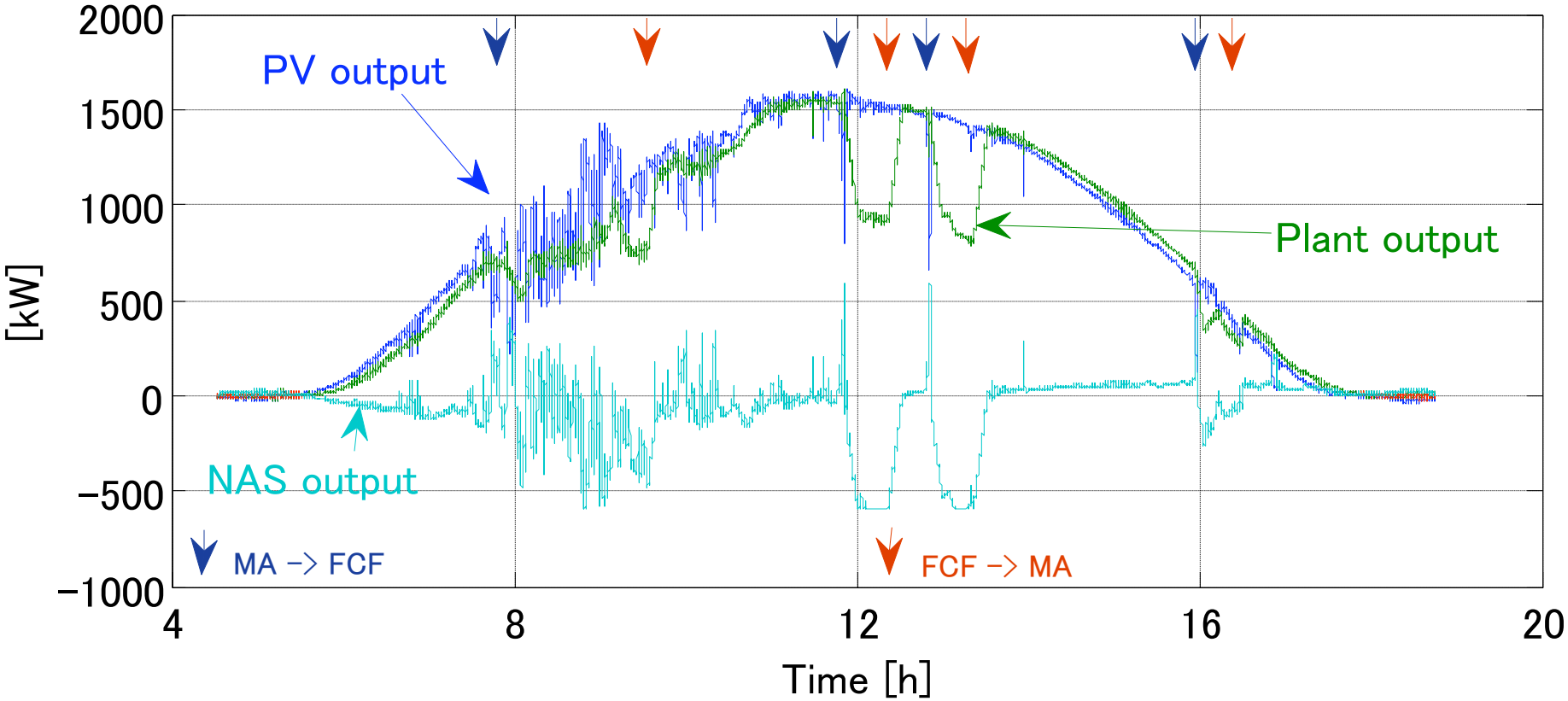

Scheduled operation

- Off-line generation output scheduling
  - ✓ for profit-maximization
  - ✓ for cooperation between PV-PS and conventional bulk generators

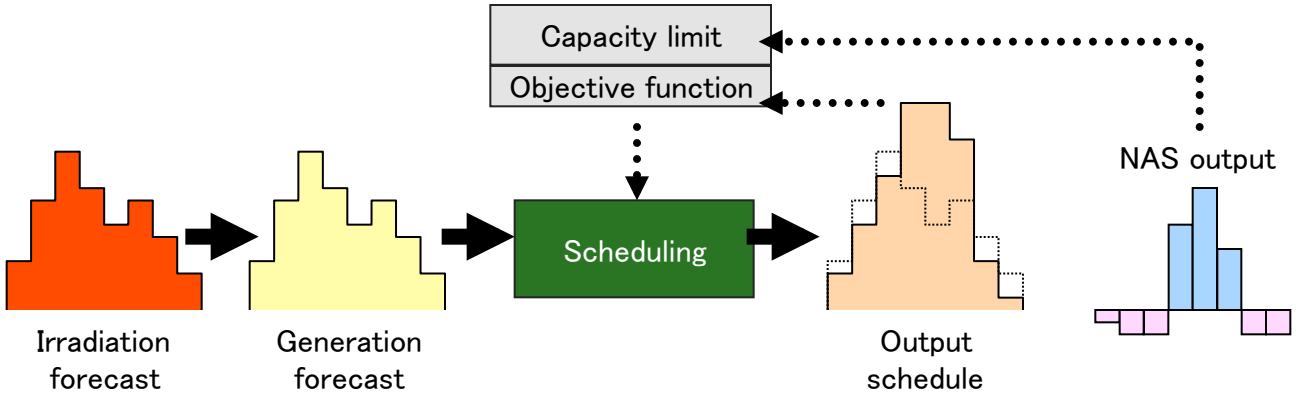

- Difference between scheduled and actual PV generation is compensated by NAS
  - ✓ Forecast errors
  - ✓ Amount of time-shifting

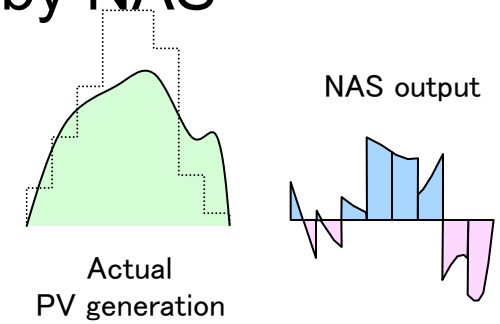

Irradiation forecast (developed by JWA)

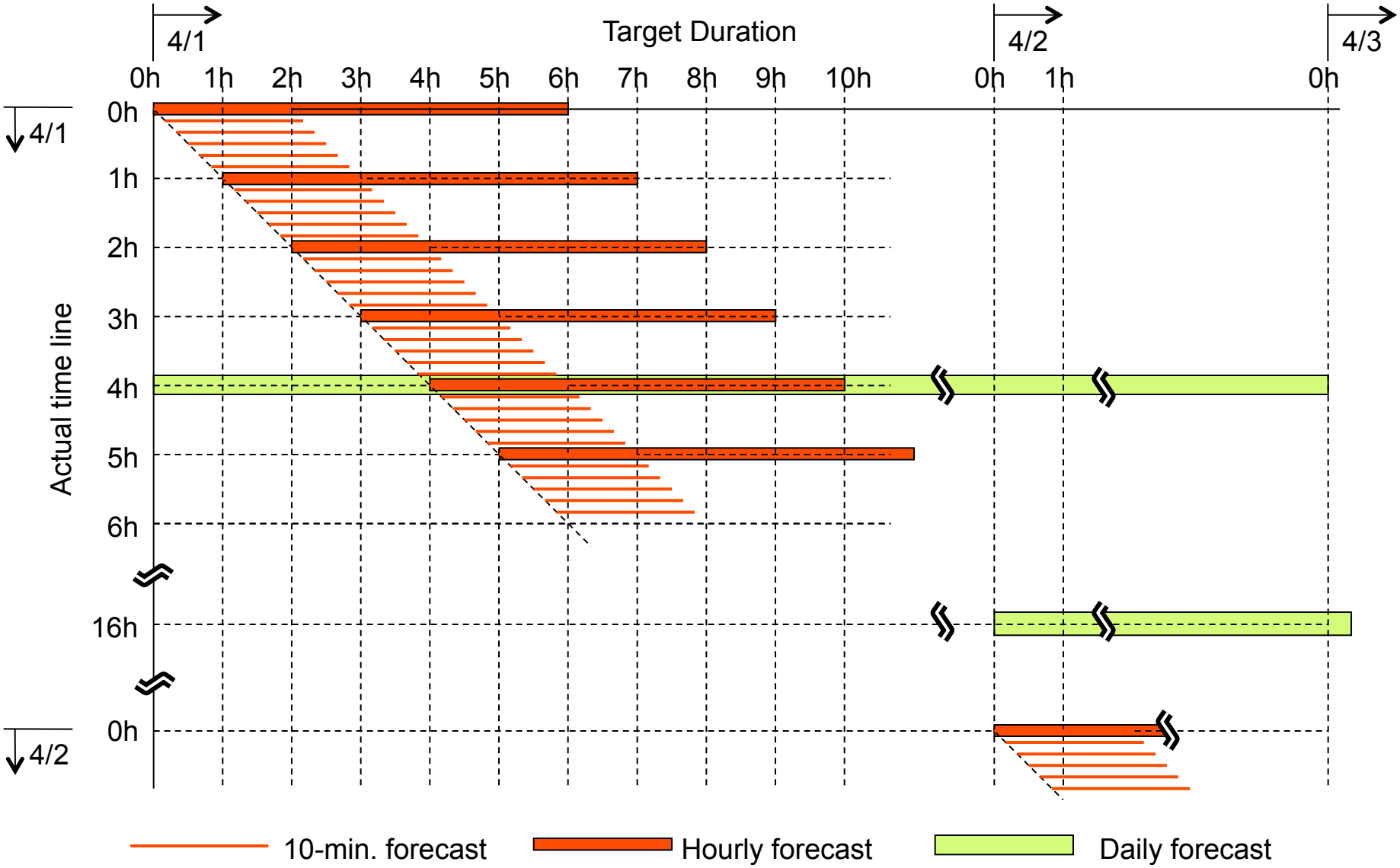

Time-line of scheduled operation

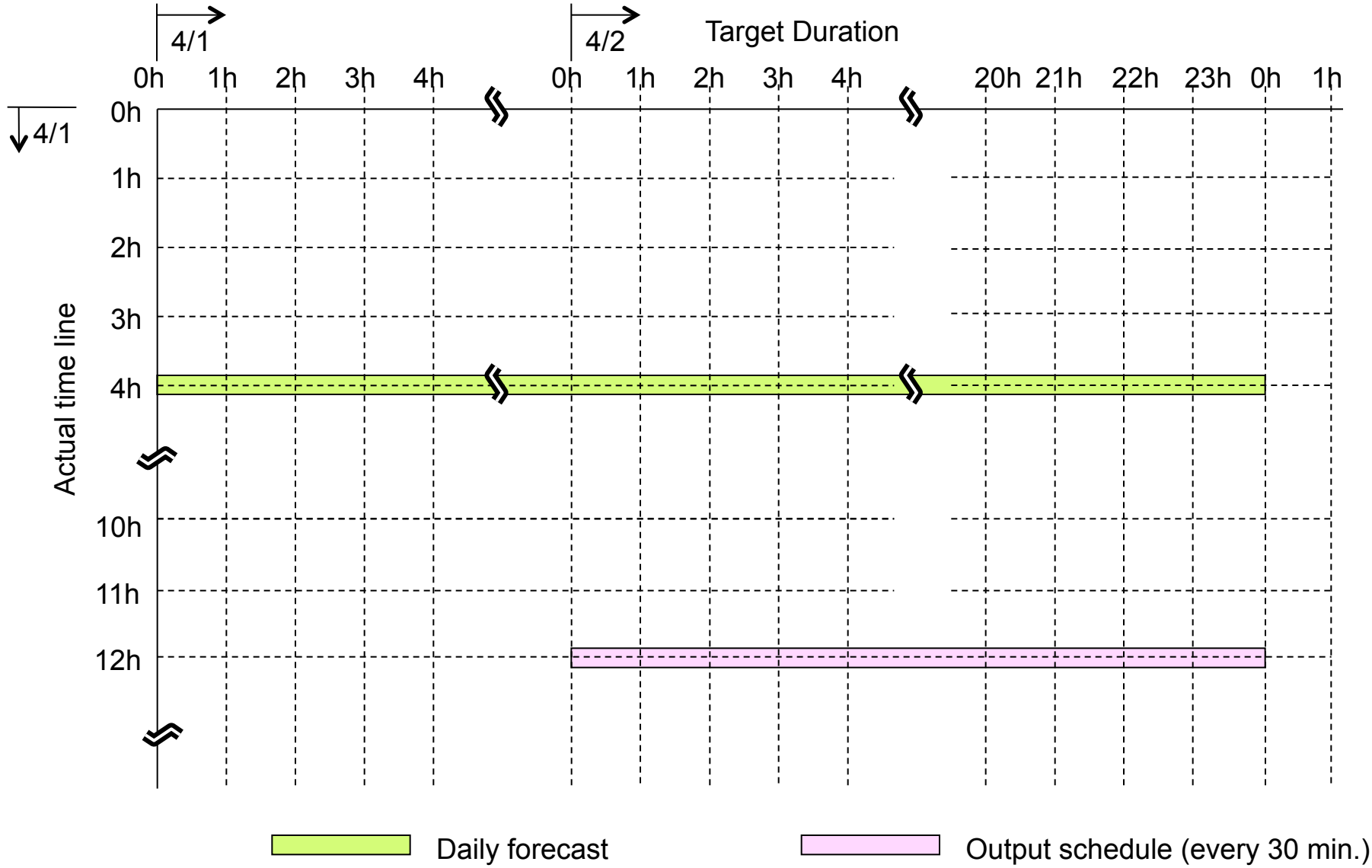

Example of scheduled operation

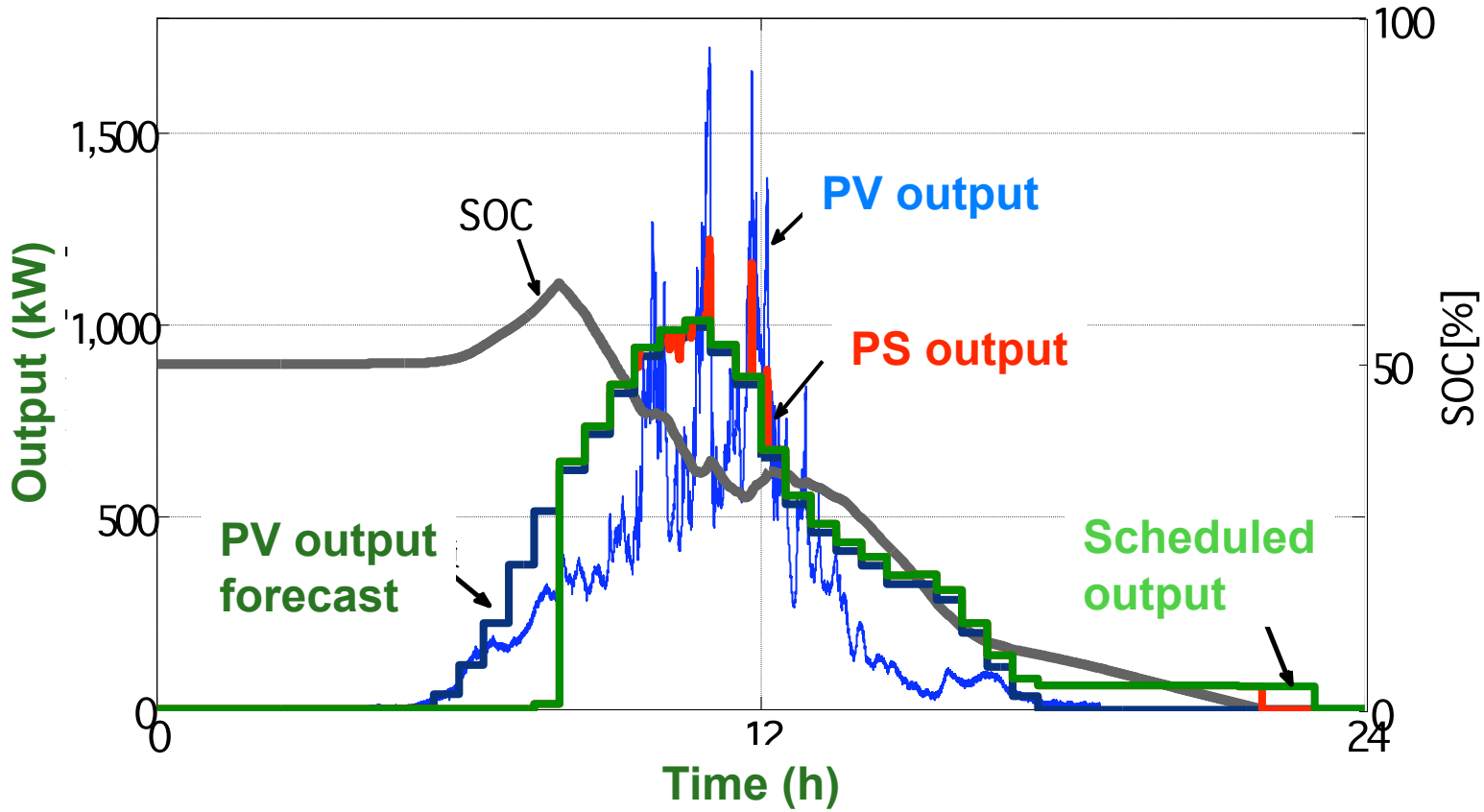

- PV generation in the morning is shifted to the evening
- Forecast error results in miss-operation

Spatial smoothing effect

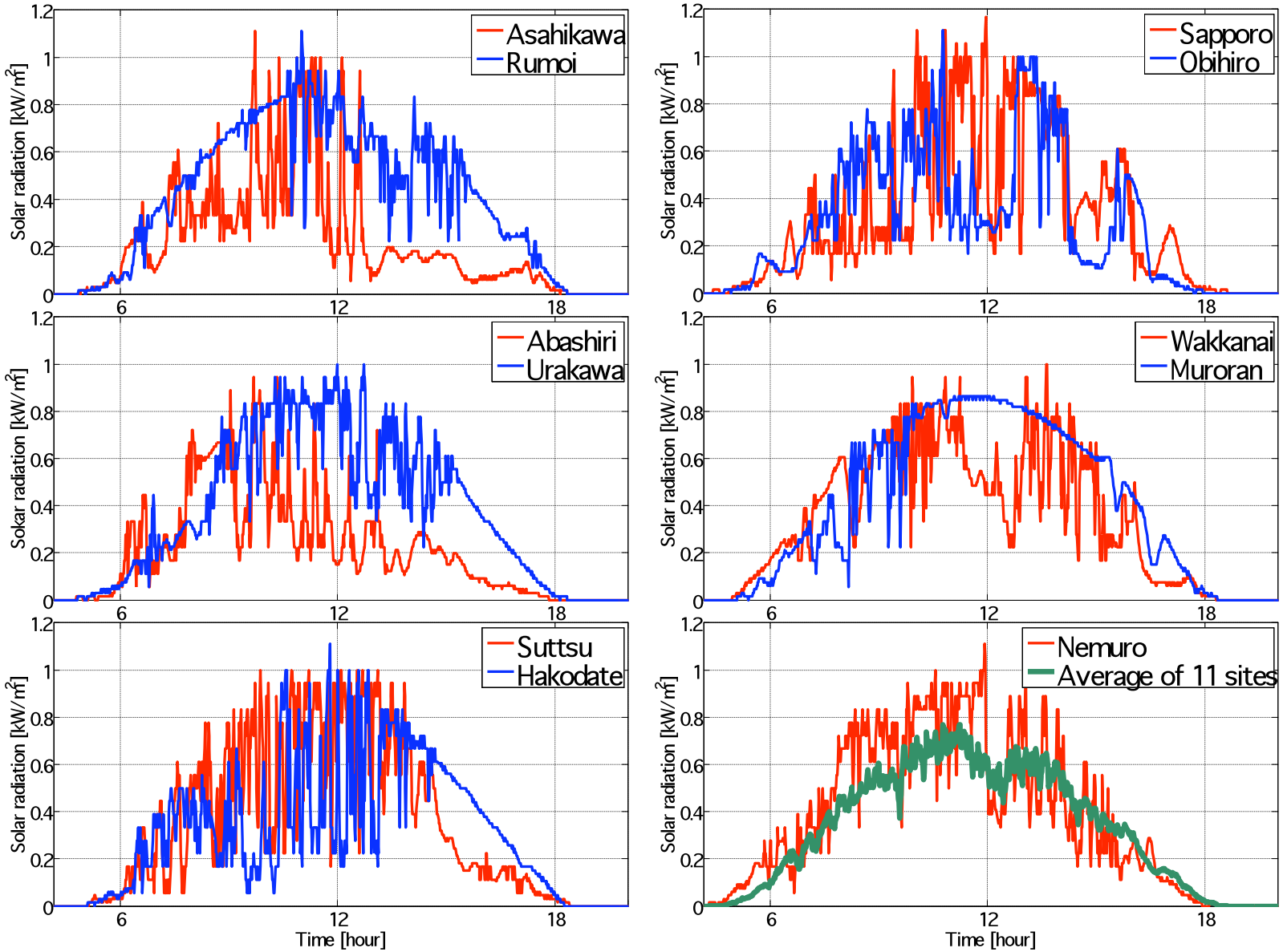

Wide-area operation system

- Promoted by Ministry of Environment, Japan (FY2012-2014)

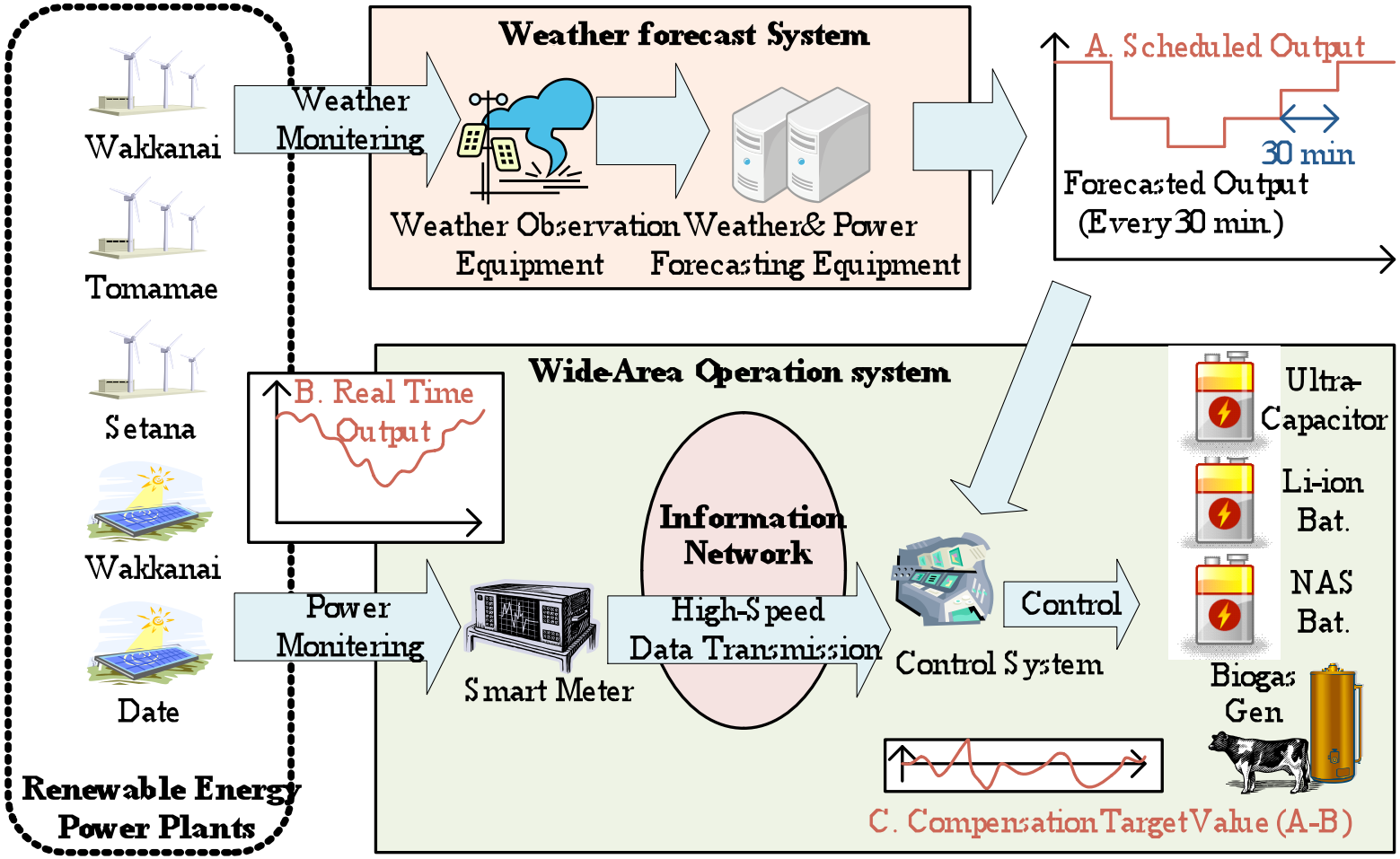

Conducted by:
Japan Weather Association, Meidensha Corp., Hokkai Electrical Construction Co., Inc., Hokuden Sogo Sekkei Corp., and Hokkaido University

Configuration

1 WT @ Wakkanai
660kW × 3 = 1,980kW

3 WT @ Tomamae
600kW × 2 + 1,000kW = 2,200kW

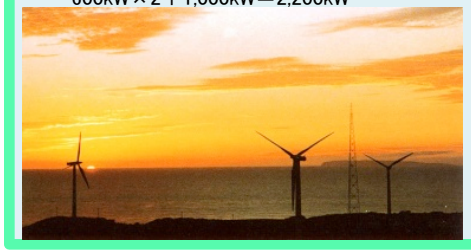

4 WT @ Setana
600kW × 2 = 1,200kW

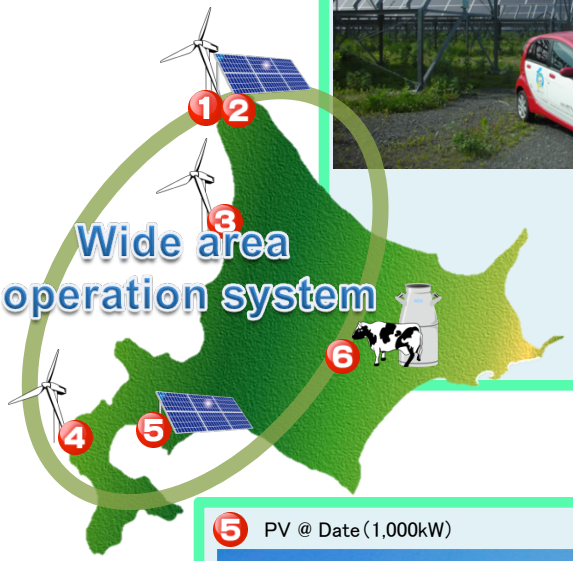

2 PV @ Wakkanai (5,020kW)

NAS battery

Li Battery

EDLC

5 PV @ Date (1,000kW)

6 Bio-gas Engine @ Shihoro (50kW)

- Measurements and forecasts will start in this summer / autumn.
- Preliminary study results will be published in *ISGT Europe 2013* @ Copenhagen (Oct. 2013)

Developed control system

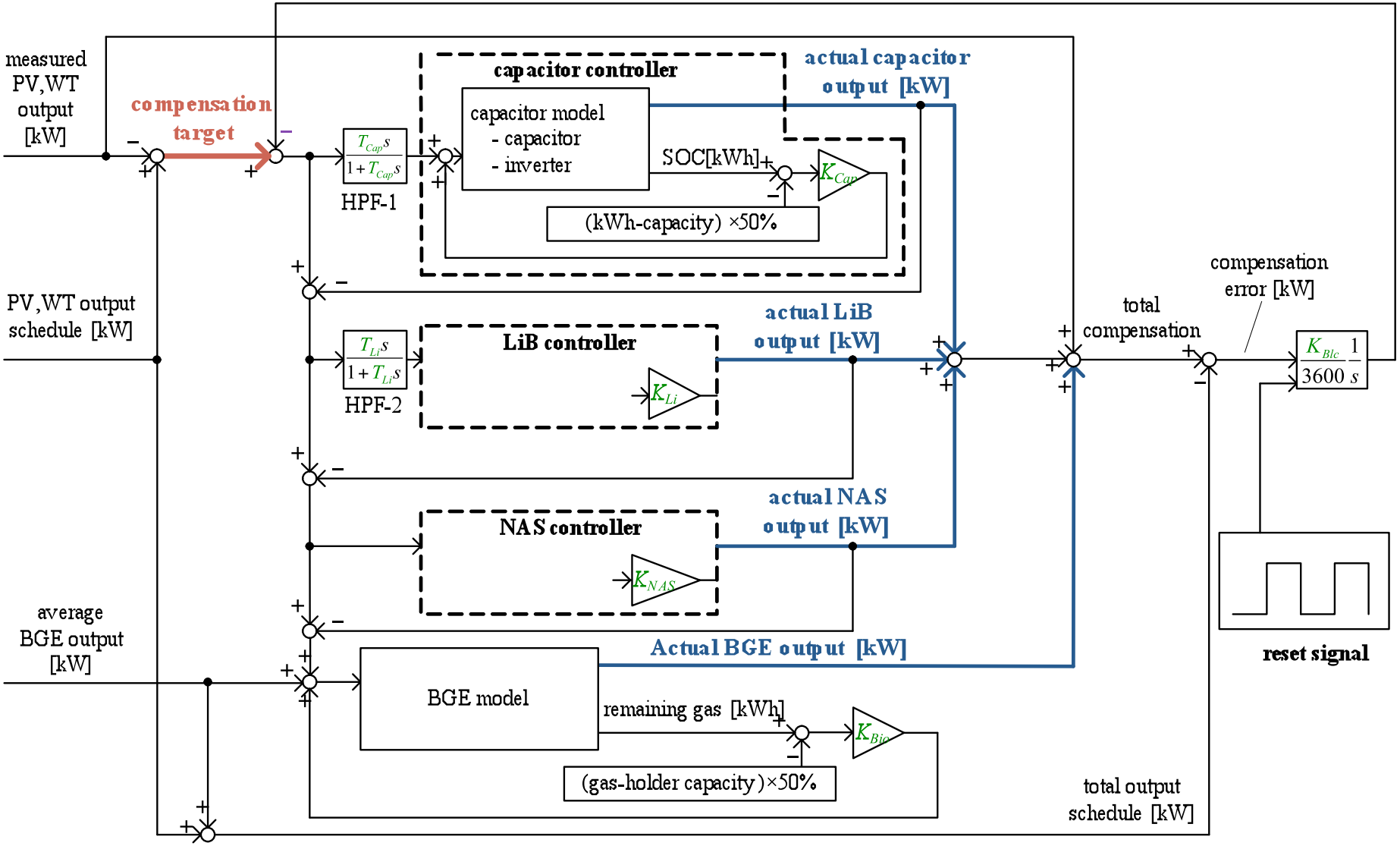

Developed control system

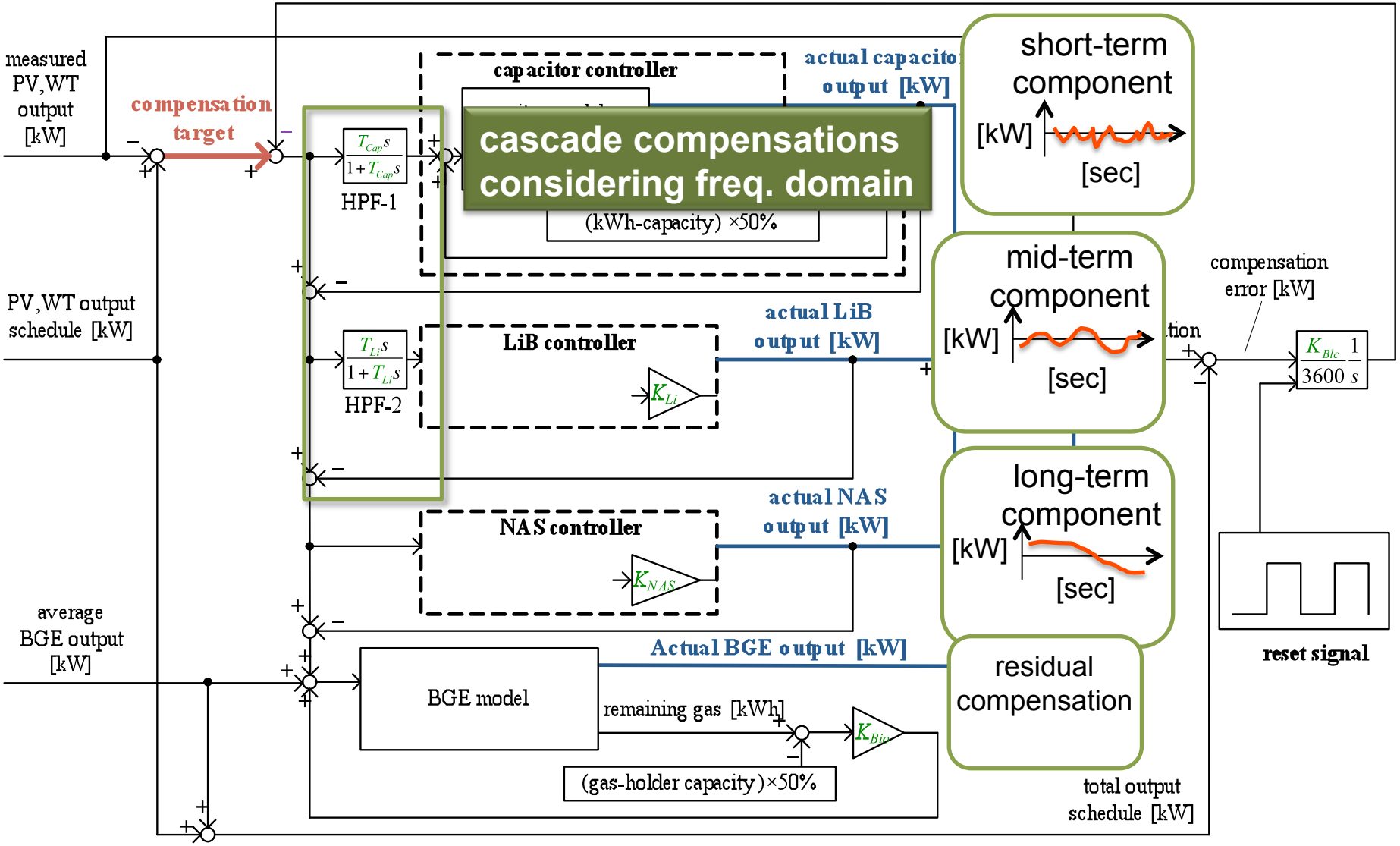

Developed control system

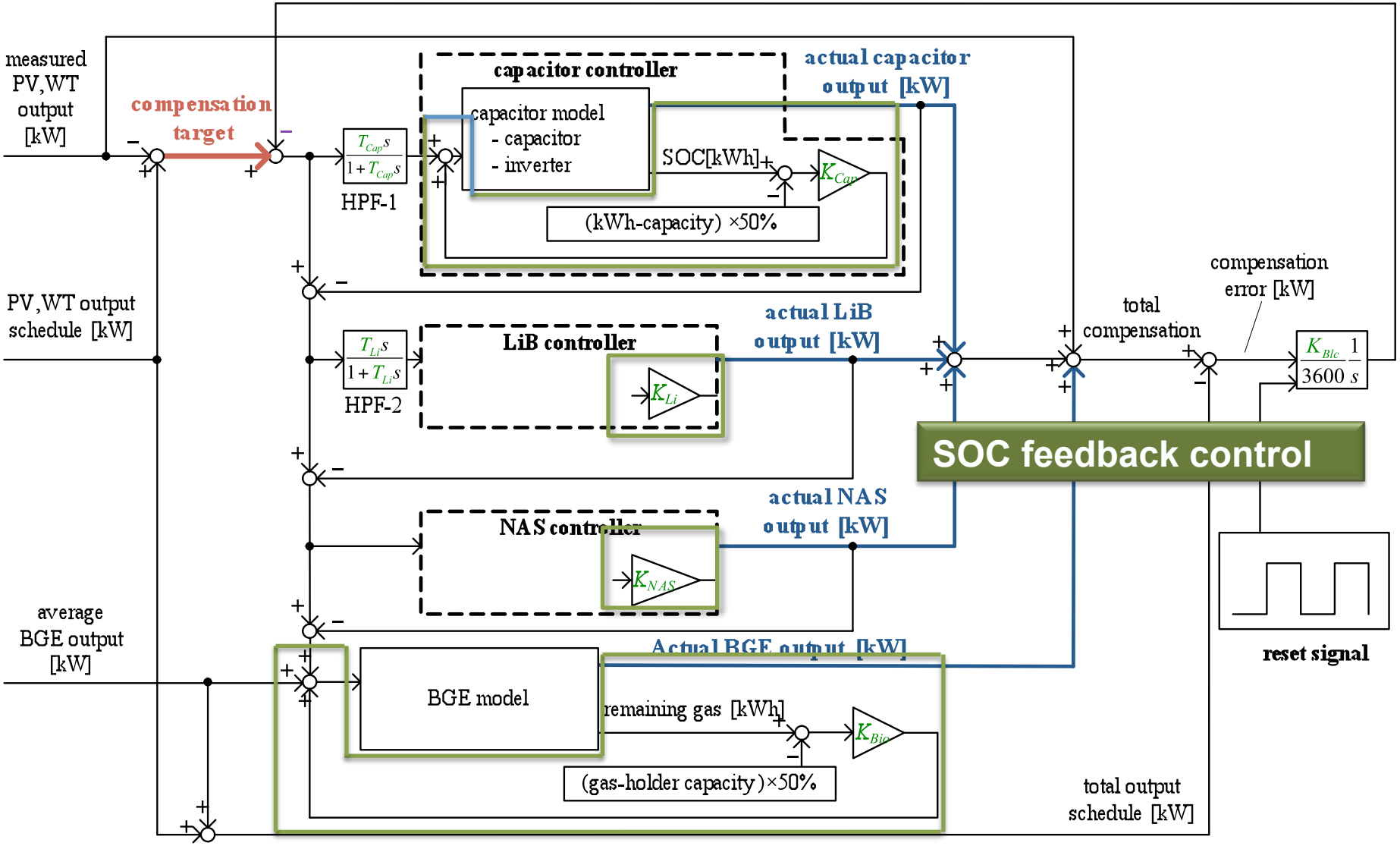
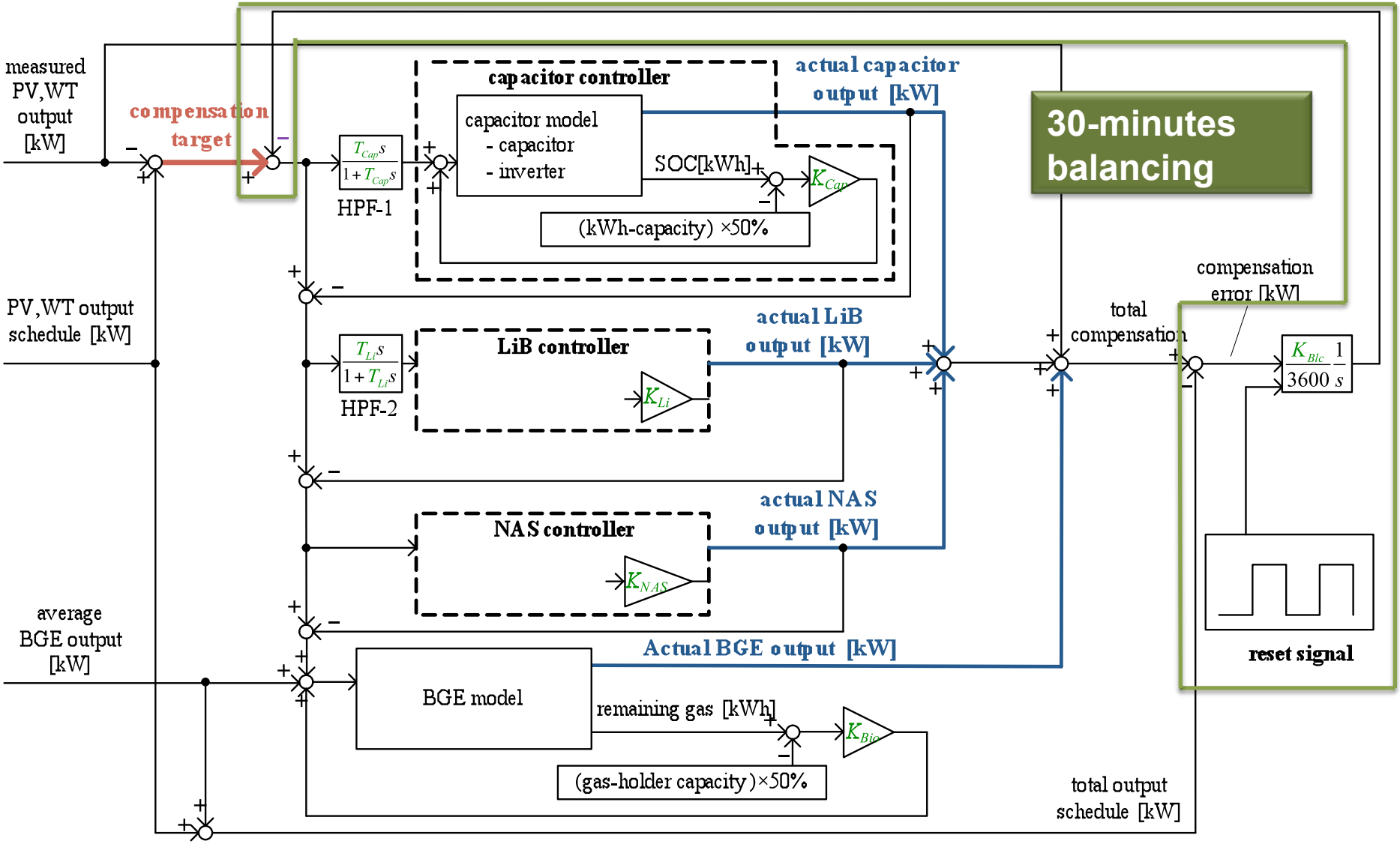
Developed control system