2013 Symposium
On Microgrid

10MW class Hydro/PV/Battery Hybrid Microgrid System in Yushu,China

Xu Honghua
IEE, CAS

Sept. 2013

Contents

1. Background

2. Integration of the microgrid system

3.Key equipments research

4 Conclusion

. Background

The Chinese government target for PV installation by 2015 i

5GW, including 10GW DG-PV.

30 demonstrations of micro-grid is one of the key tasks.

Potential of Hydro/PV/Battery(HPVB)-supplied Micro Grid

About 45,000 small hydro-powers supply 300 mil. populatio

n China. But there is serious electricity shortage especially i

ry season.

There are many hydro-powers in worldwide, such as in

ndia(2.4GW), Asia-Pacific region, Africa and Brazil.

玉树项目背景
Background of Yushu Project

玉树概况：远离青海电网，人口31万，水电冬季运行受限，电力紧缺
Yushu is far from Qinghai main grid and the population is about 310,000.

电力装机（震后）：2座小水电12MW，冬季电力缺口≥ 2MW(震前缺12.6MW
Electricity(after earthquake): 2 small hydro-powers (12MW); power shortage≥2MW

太阳能资源：比较丰富，日照时数2600～3600h，年辐射量6500MJ/m^{2}以上
Solar resource: sunshine hours 2600 ~ 3600h; the annual radiation ≥ 6500MJ/m^2

解决方案：建设10MWp光电（带储能）+12MW水电，形成水/光互补微网
Solution: 10MWp PV(with battery)+12MW hydro-power, to form a HPVB MG.

近期需求：一期建设2MWp光伏电站，支撑冬季晚高峰4小时，并带重要负荷
1st stage: 2MWp PV to support 4h peak in winter and to supply critical.

2. Integration of the microgrid system(1)

Main goals of designing a HPVB-supplied MG

- 供电充裕性 Adequacy
- 系统稳定性 Stability
- RE利用率 RE Availability

Main Considerations

- **电**网与负荷：负荷峰谷差、季节性， 独立**电**网
  Peak and valley load , seasonal feature; and isolated grid.
- 小水**电**：径流或带调节水库（日、月、季、年），枯水季和丰水季
  Small-hydro: without or with a reservoir, dry or rainy season.
- 光照资源：随机性、**间**歇性、季节性
  Solar resource: random, intermittent and seasonal feature.
- **发**/储**电设备**：光伏跟踪形式、储能装置等
  Generator/Storage: types of solar tracker, storage and etc.

. Integration of the microgrid system(2)

玉树微网总体方案
cheme of Yushu MG

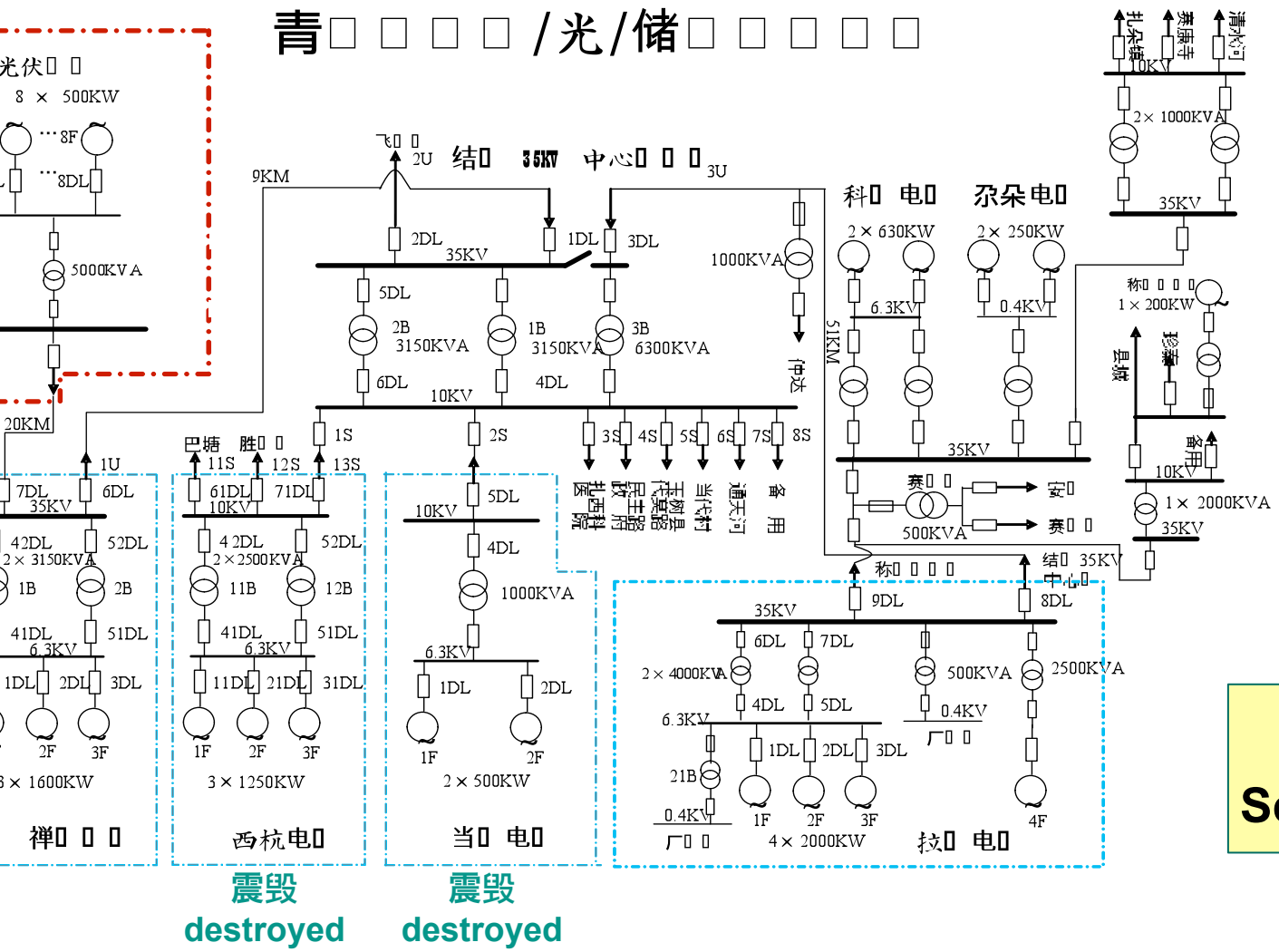

- 均接入35kV电压等级
  Connect into 35kV-level
- 受电网调度
  Scheduled by control center
- 小水电全天输出
  Hydro can output all tim
- 光伏在晚高峰8:00-12:00
  PV outputs in peak time (8:00pm-12:00pm)

方案:水电+可调度光伏

Scheme: hydro+Schedulable

. Integration of the microgrid system (3)

玉树2MW光伏-储能电站
MW PVB station of Yushu

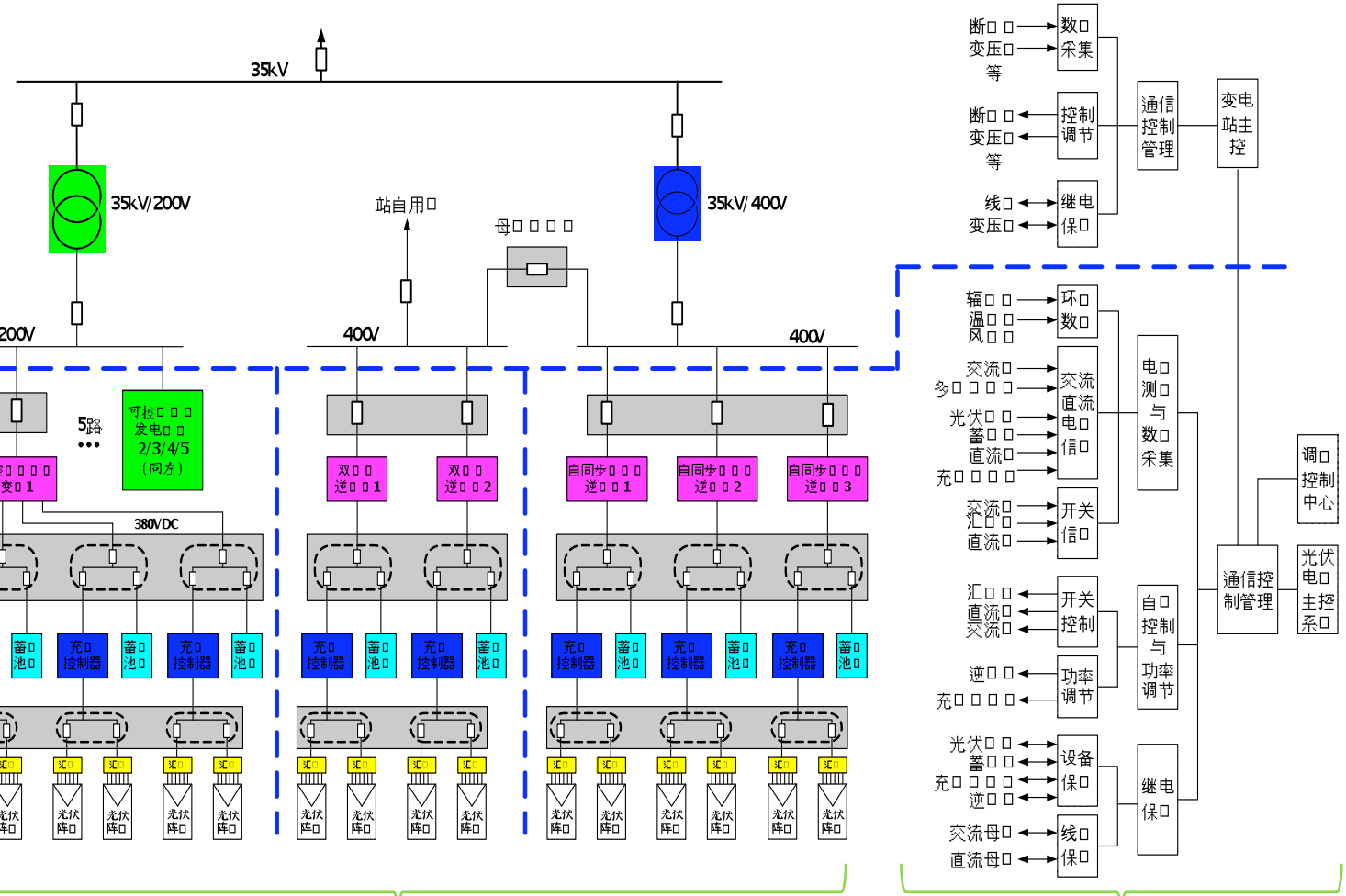

20条100kVA光-储支路
20 of 100kVA PV-B branches

综合自动化系统
Automation System

- 2MWp平单轴光伏阵列
  2MWp H-axis PV array
- 15.2MWh铅酸蓄电池
  15.2MWh Lead-acid
- 电站级综合自动化系统
  automation system

光伏-储能电站特性：
New Feature:

- 电站功率可调度
  Schedulable of PVB sta
- 支路功率智能分配
  Load's smart allocation
- 电网故障时独立带厂用
  Supply auxiliary power
during grid is down.

玉树2MW光伏-储能电站 (2MW PVB station in Yushu)

水平单轴跟踪（H-axis

0kVA逆变器（下垂控制）
VA inverter(Droop control)

150kW DC/DC 充电控制器
150kW charger(PV-battery)

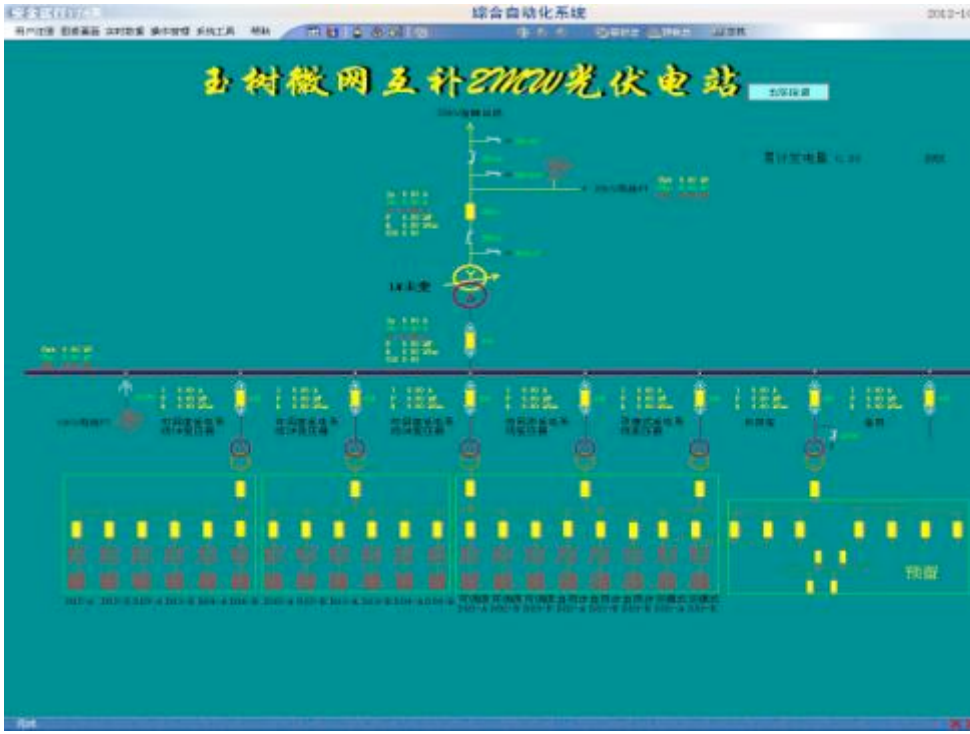

综合自动化系统软件界面
Software HMI of automation system

. Integration of the microgrid system(4)

逆变器调度功率分配策略
Inverter's power allocation strategy

- **基于蓄电池荷电状态的分配策略 Battery SOC-based strategy**
- 基于逆变器容量的比例均分策略 Proportion strategy based on the inverter capacity
- 功率等额分配策略 Equivalent power allocation

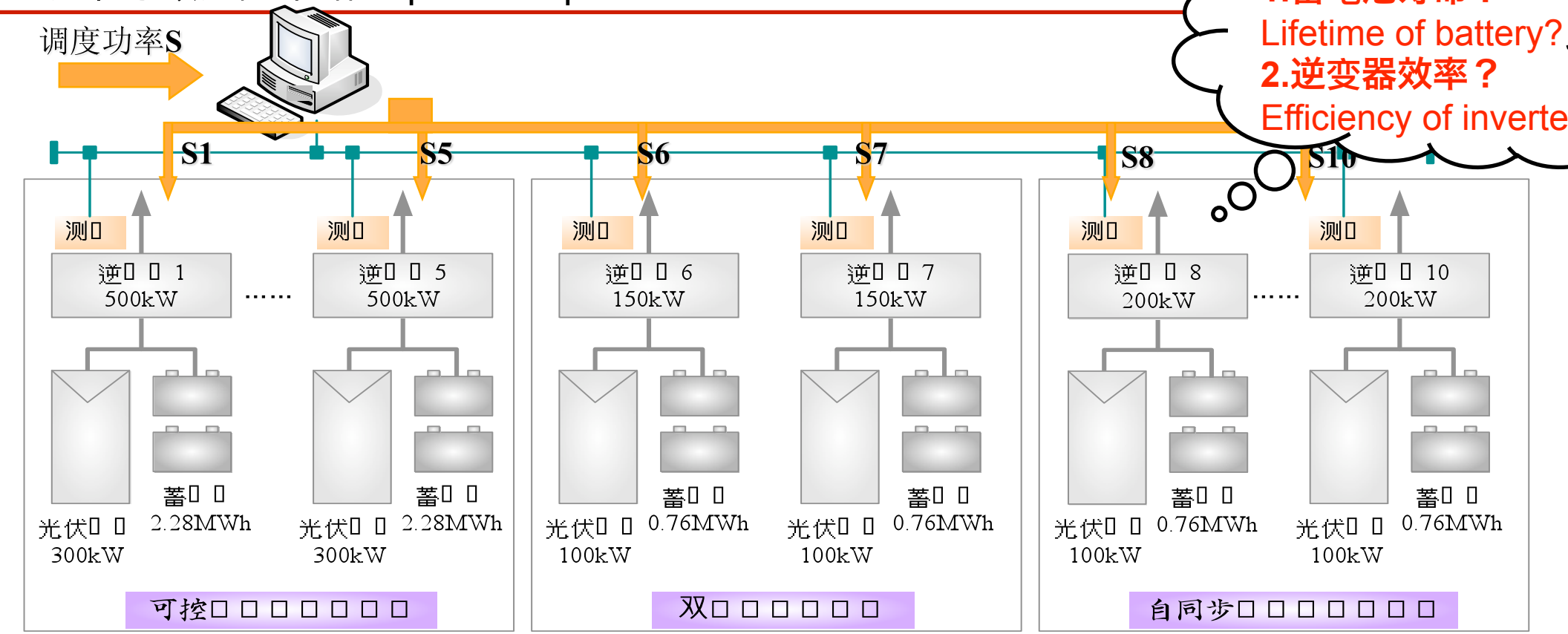

. Integration of the microgrid system(5)

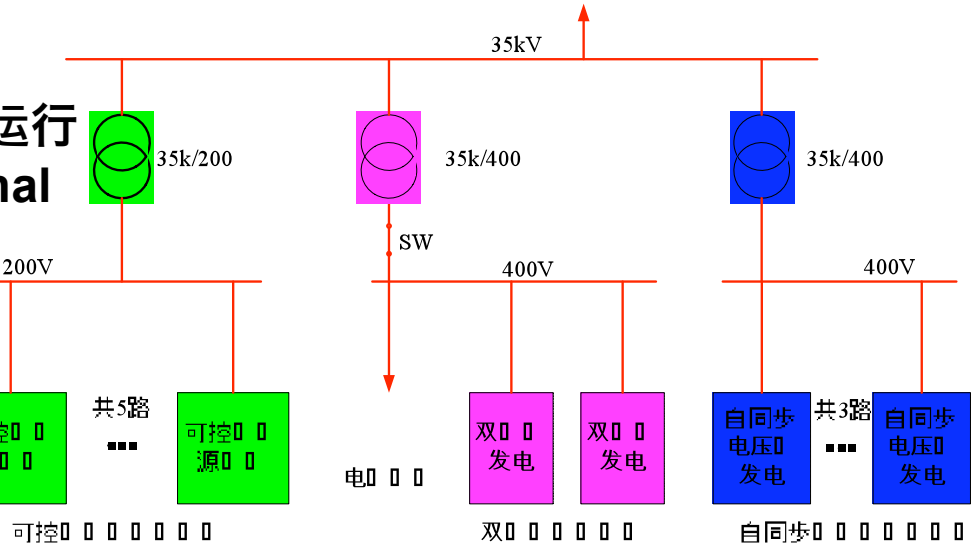

35kV电网停电瞬间
Grid-down

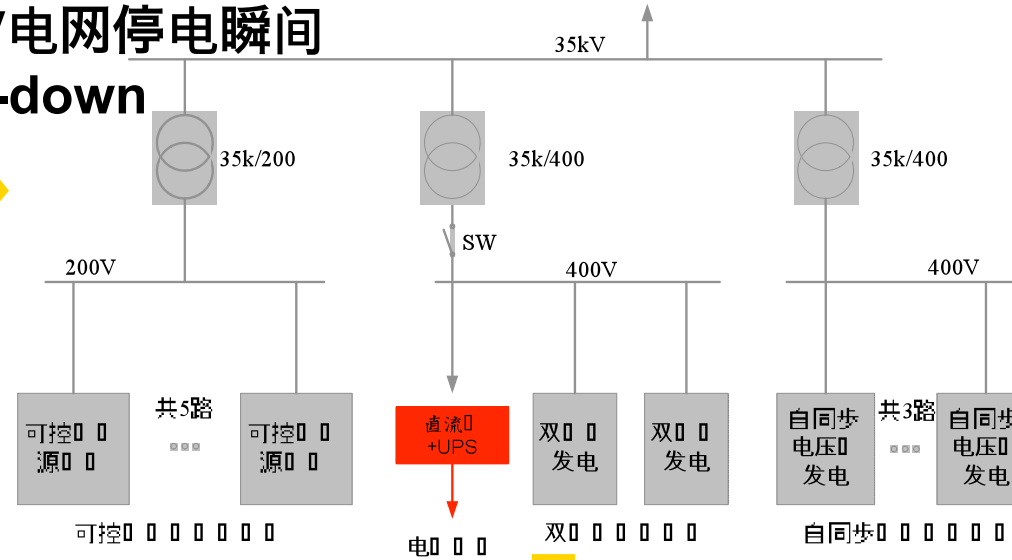

35kV电网停电后
After grid-down

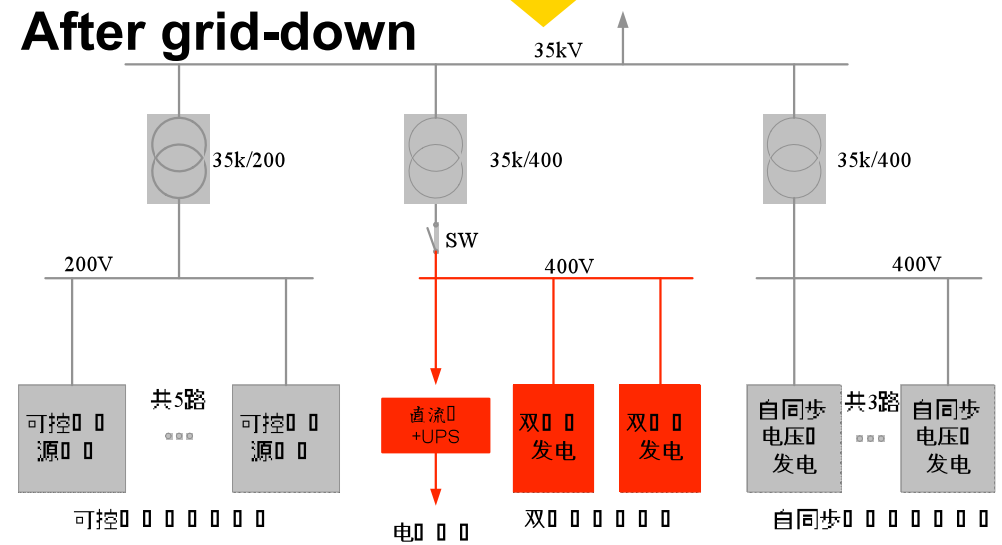

5kV电网恢复
Grid restore

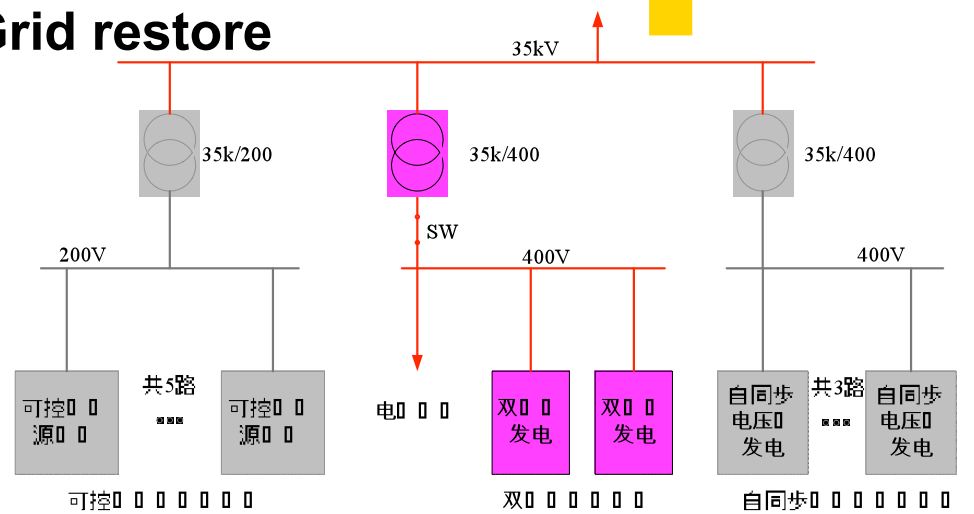

. Key equipments research(1)

光/储支路框图
ock diagram of PV/Battery branch

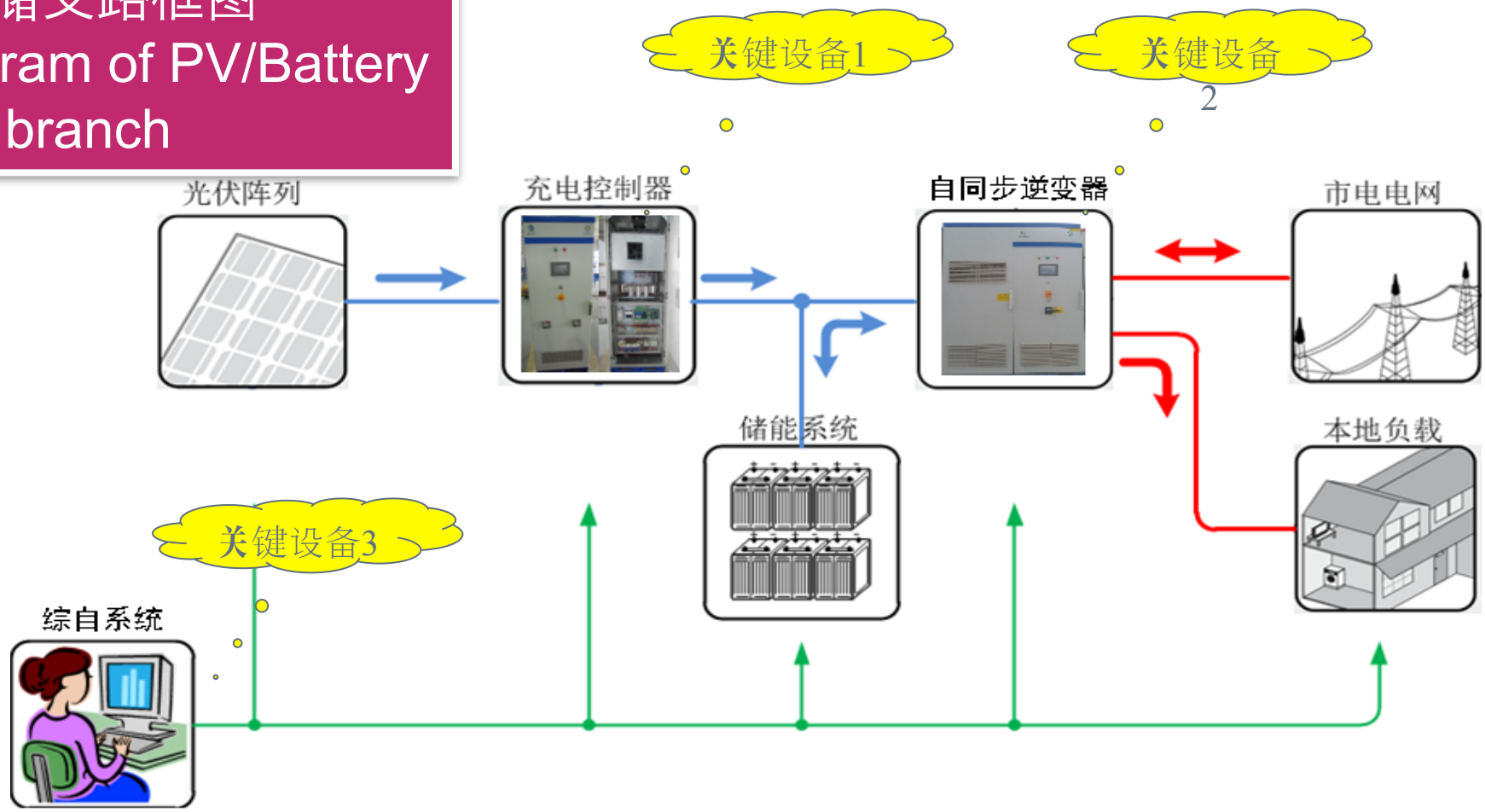

- 关键**设备**:自同步**电压**源型逆**变**器、充**电**控制器、综自系**统**和能量管理系**统**。
  Key equipments:Self-synchronrous Voltage-source Inverter、Charger、Integrated Automation and Energy Management(IAEM).

. Key equipments research(2)

自同步电压源型逆变器
Self-synchronrous Voltage-source Inverter

- **性能指标：额定容量200kVA， 最大效率95.7%， 输出电能谐波THD < 3%**

  Performance: Rated Capacity 200kVA, Max efficiency 95.7%, THD < 3%

- 关键技术：并联控制技术， 模式平滑切换， 逆变器保护技术

  Key Technolog: Parallel Control, Smooth Transition, Inverter Protection

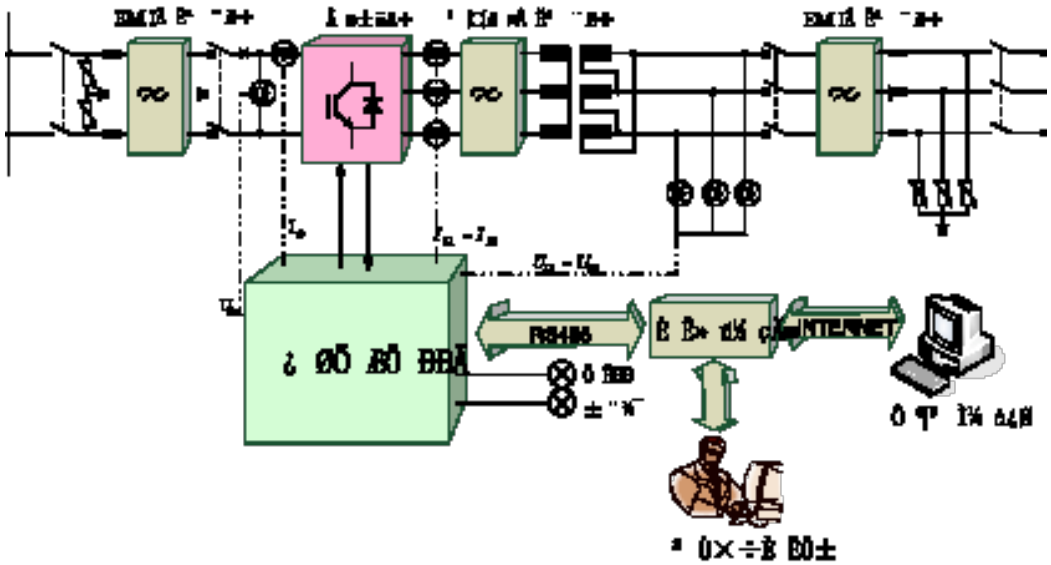

总体技术方案
Technical solutions

实验样机
Prototype

逆变器并联控制技术
Parallel Control Technology of Inverters

增加外特性下垂的控制环节，实现具有类似旋转电机的下垂特性

Increase external characteristic drooping control, to achieve a similar droop characteristics of the generator rotation

无互联线组网

No interconnection lines

扩容,即插即用

Expansion, Plug and Play

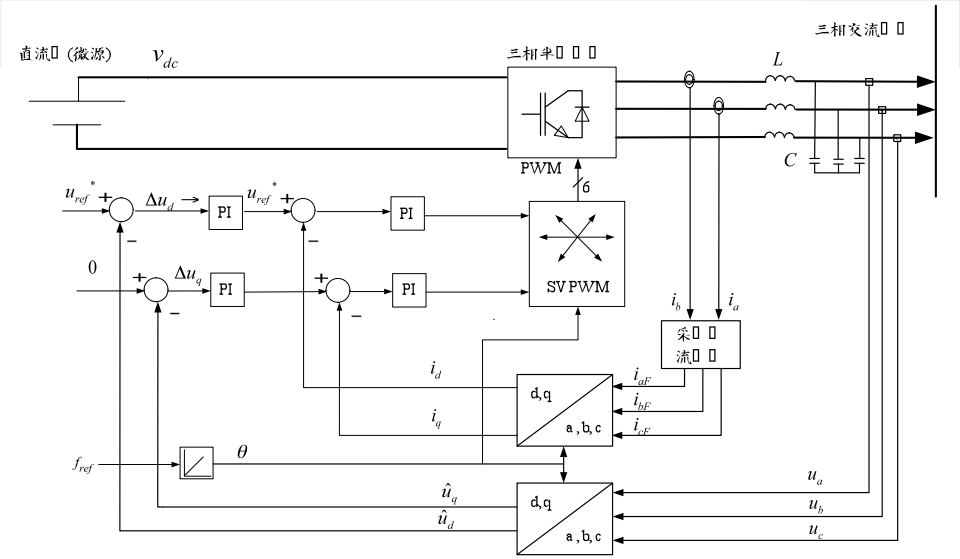

自同步逆变器控制框图

Control schematics of self-synchronrous Inverter

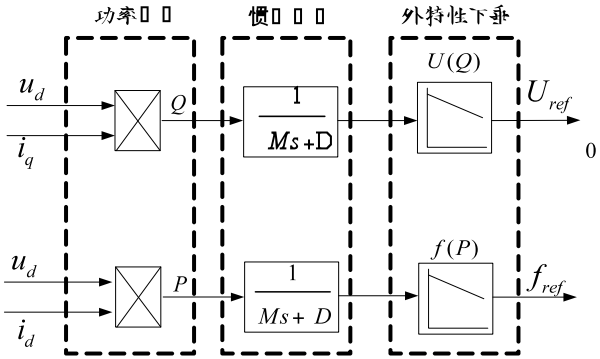

下垂控制框图

Block diagram of droop control

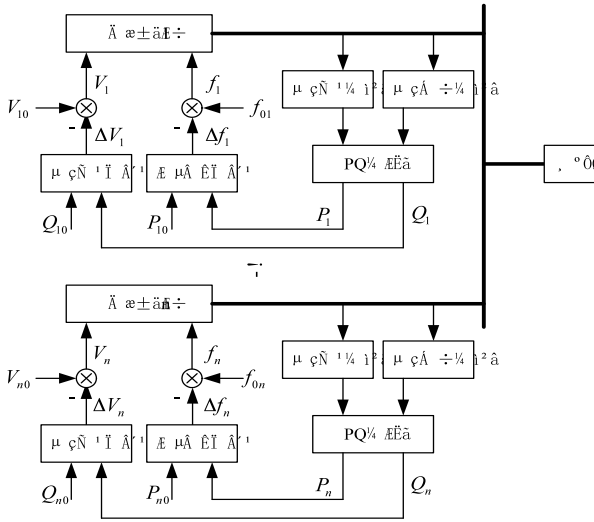

并联控制框图

Block diagram of parallel control

逆变器并联运行
Parallel Run

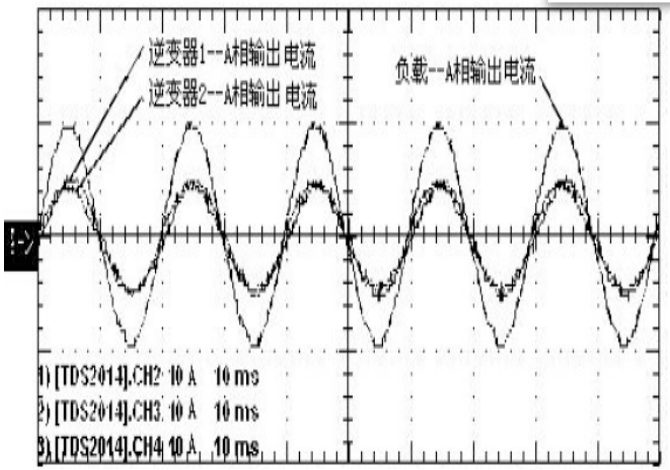

带载稳定运行

Run with constant load

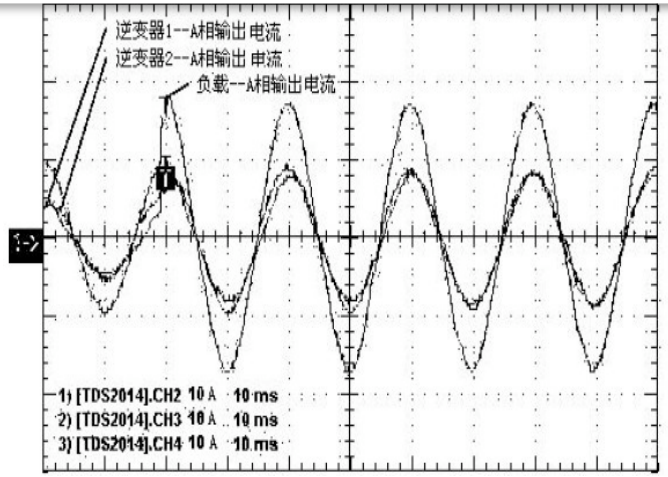

负载突增

Run while load is increased

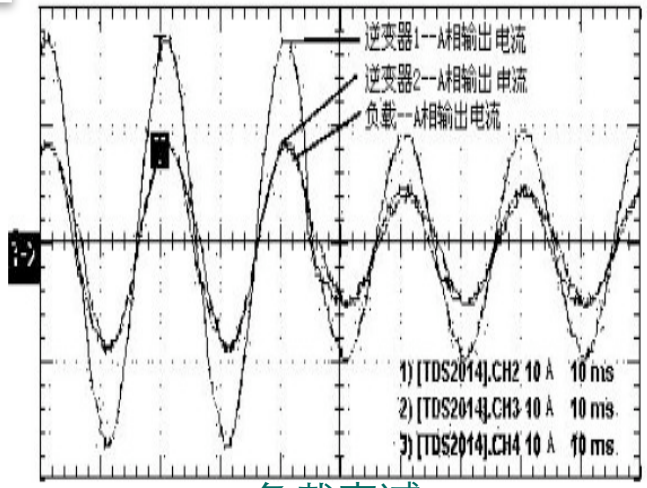

负载突减

Run while load is decreased

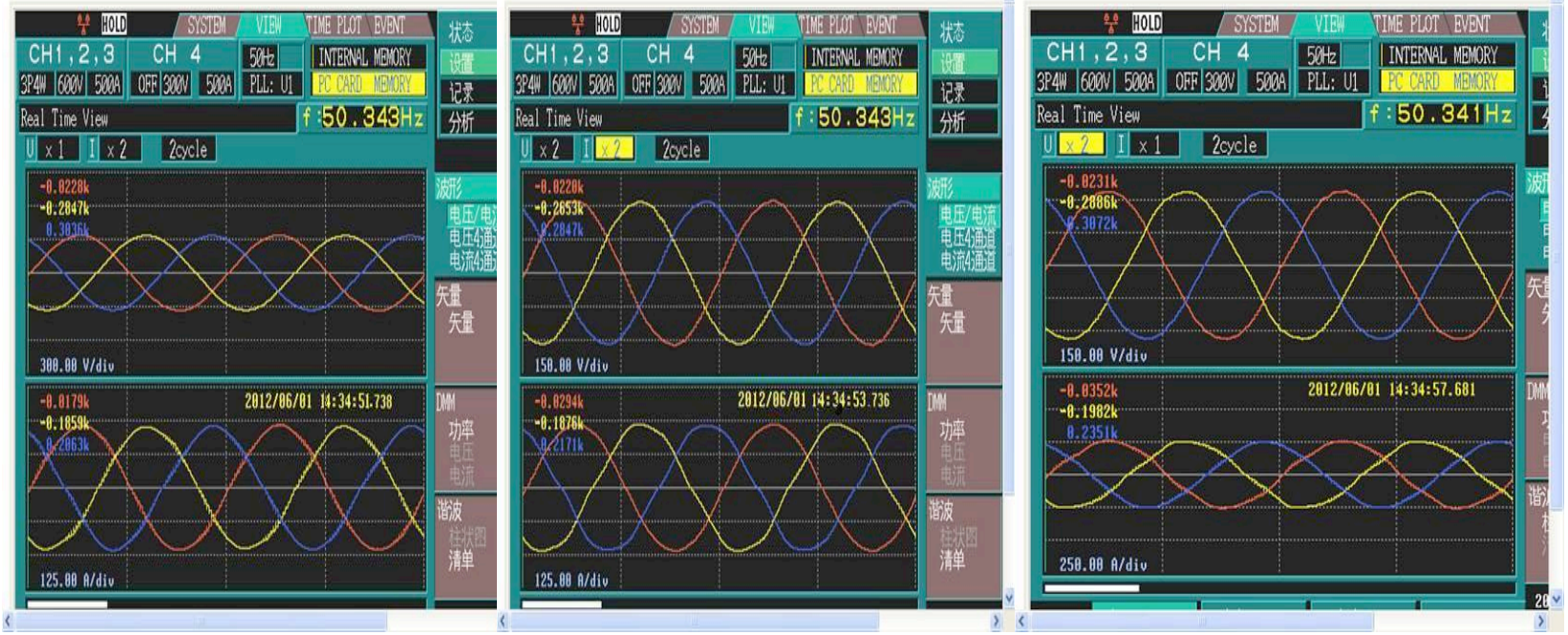

三台逆变器并联并网运行

Parallel run of three self-synchronrous inverters

独立/并网平滑切换
Smooth transition of two modes

- 无冲击电流，平滑切换

  No peak current, smooth transition

- 并网到独立切换时间120ms

  Transition time from grid-connected mode to stand-alone mode is 120ms.

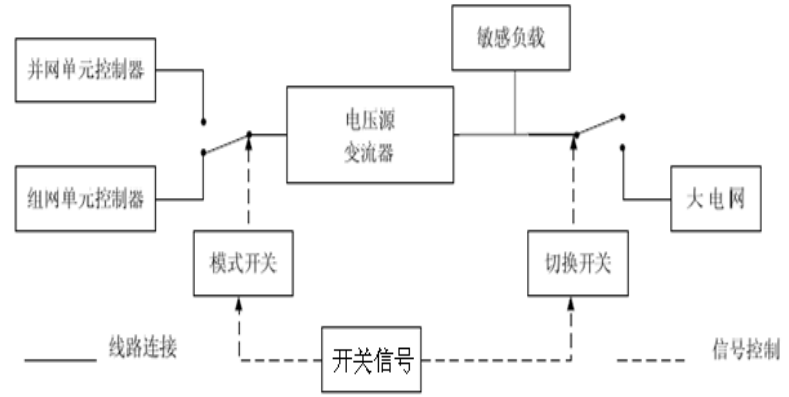

模式切换原理
Principle of Mode Transition

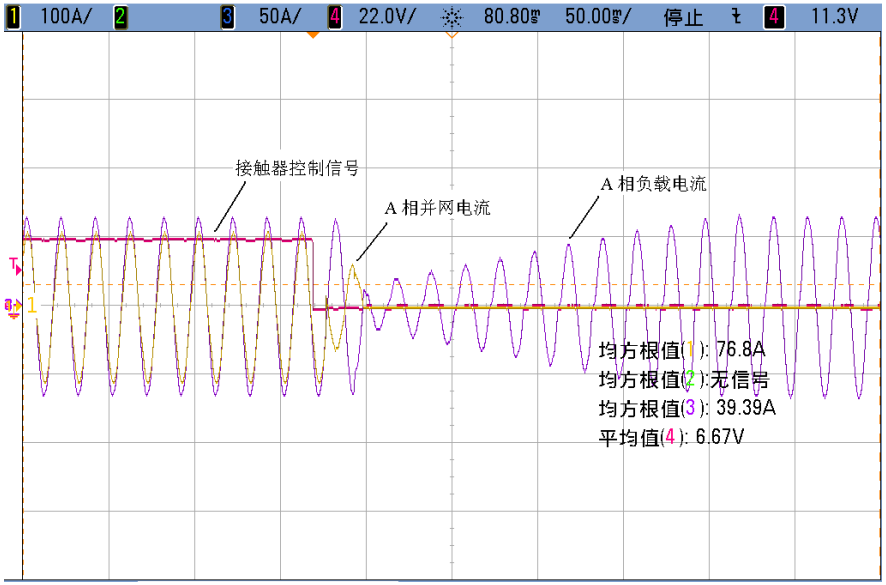

并网切换到独立
Transition from grid-connected to stand-alone

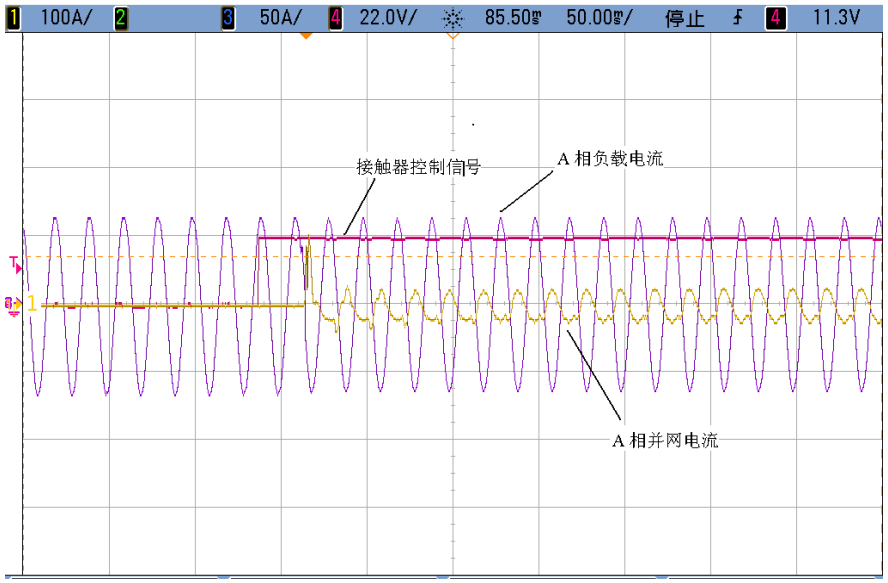

独立切换到并网
Transition from stand-alone to grid-connected

. Key equipments research(3)

高效充电控制器
Charger

- **性能指标：额定容量150kW， MPPT跟踪误差 ≦ 1%， 最大充电效率 98.5%**

  Performance: Rated Capacity 150kW, MPPT tracking deviation ≦ 1%, Max efficiency 98.5%

- 关键技术：三段式充电控制技术， 最大功率点跟踪技术， 充电控制器保护技术

Key Technolog: Three Stages Charging method, MPPT, Charger Protection

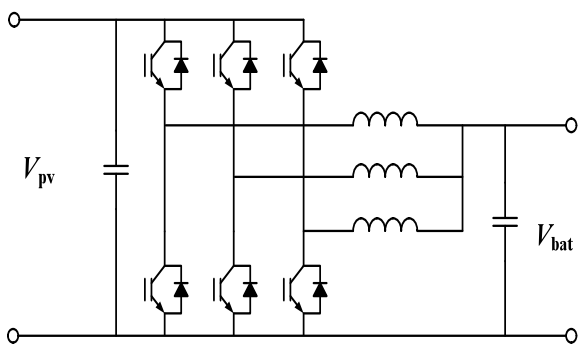

交错并联Buck-Boost电路
Buck-Boost Circuit

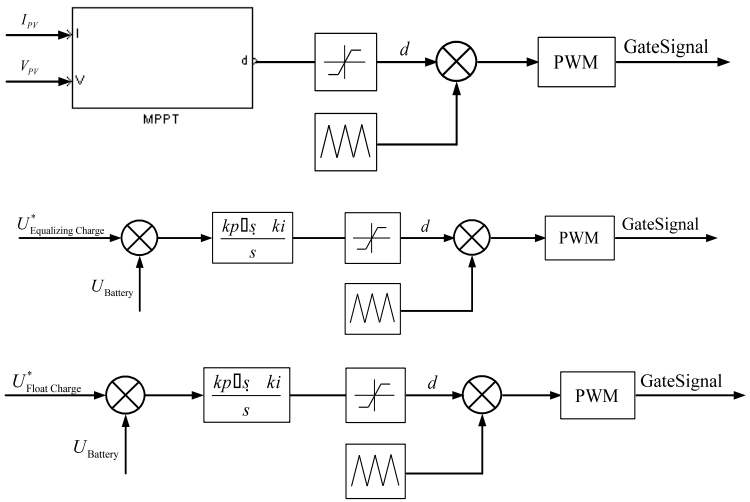

充电控制框图
Block diagram of charging control

实验样机

充电控制器转换效率
Efficiency of Charger

充电控制器运行效率测试数据
Efficiency ηof Charger

输入	电压/V	电流/A	功率/kW	满载百分比/%	效率η
输入	533.13	15.00	7.95	5.3	93.03%
输出	74.37	99.5	7.40		
输入	520.93	59.54	30.94	20.62	96.7%
输出	149.93	199.58	29.92		
输入	509.38	138.00	70.10	46.73	97.53%
输出	227.76	300.74	68.50		
输入	501.07	249.42	124.87	83.24	98.05%
输出	306.21	399.81	122.44		
输入	500.07	299.95	150	100	98. 5%
输出	312.21	473.23	147.75		

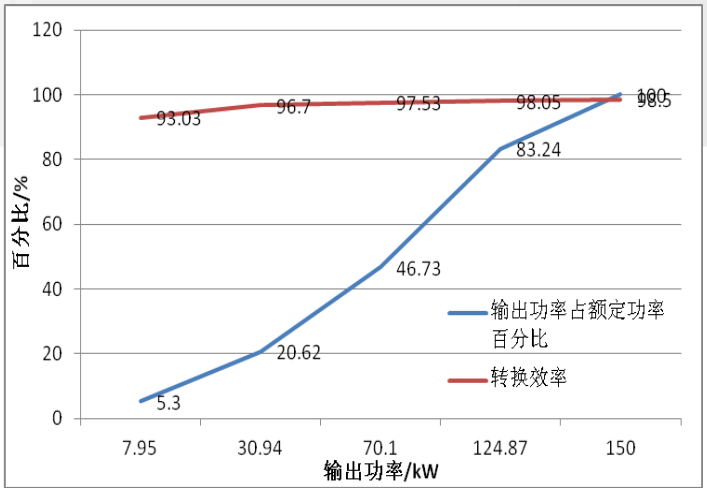

实验效率曲线
Efficiency in lab

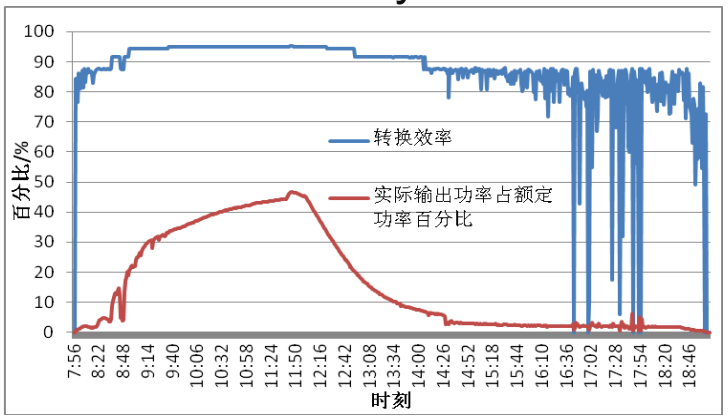

工程现场效率曲线
Efficiency at PVB station of Yushu

- 最大充电效率98.5%，输出5%额定功率（8kW）时，效率达93%。

The max efficiency is 98.5%. The efficiency reaches 93% when output power is 5% rated power.

三段式充电控制方式
Three Stages Charging Method

- 实现对蓄电池合理充放电控制，延长使用时间

  Reasonable charge and diacharge the battery to extend life time

1）以最大功率跟踪方式充电

MPPT charge

2）均衡充电

Equalizing charge

3）浮充充电

Floating charge

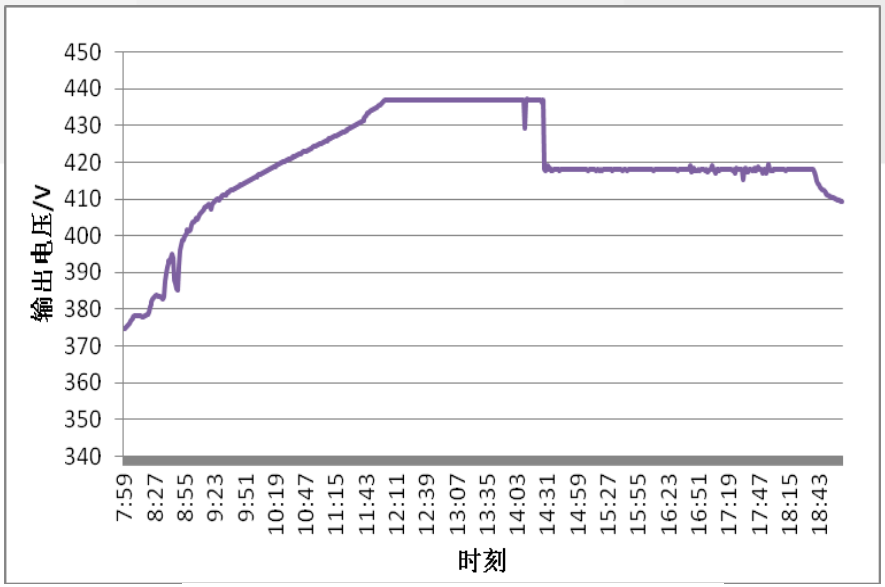

充电控制器输出电压

Output voltage of charger

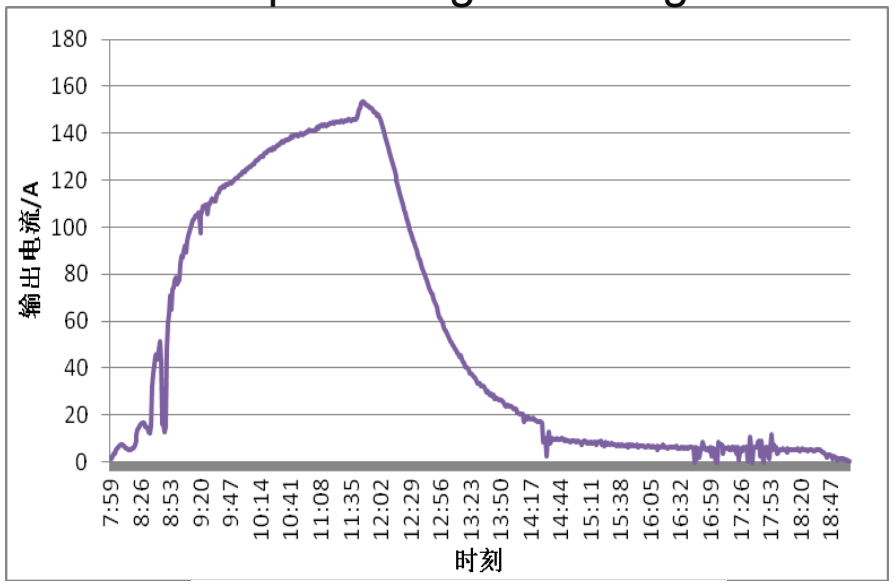

充电控制器输出电流

Output current of charger

. Key equipments research(4)

综合自动化和能量管理系统 IAEM

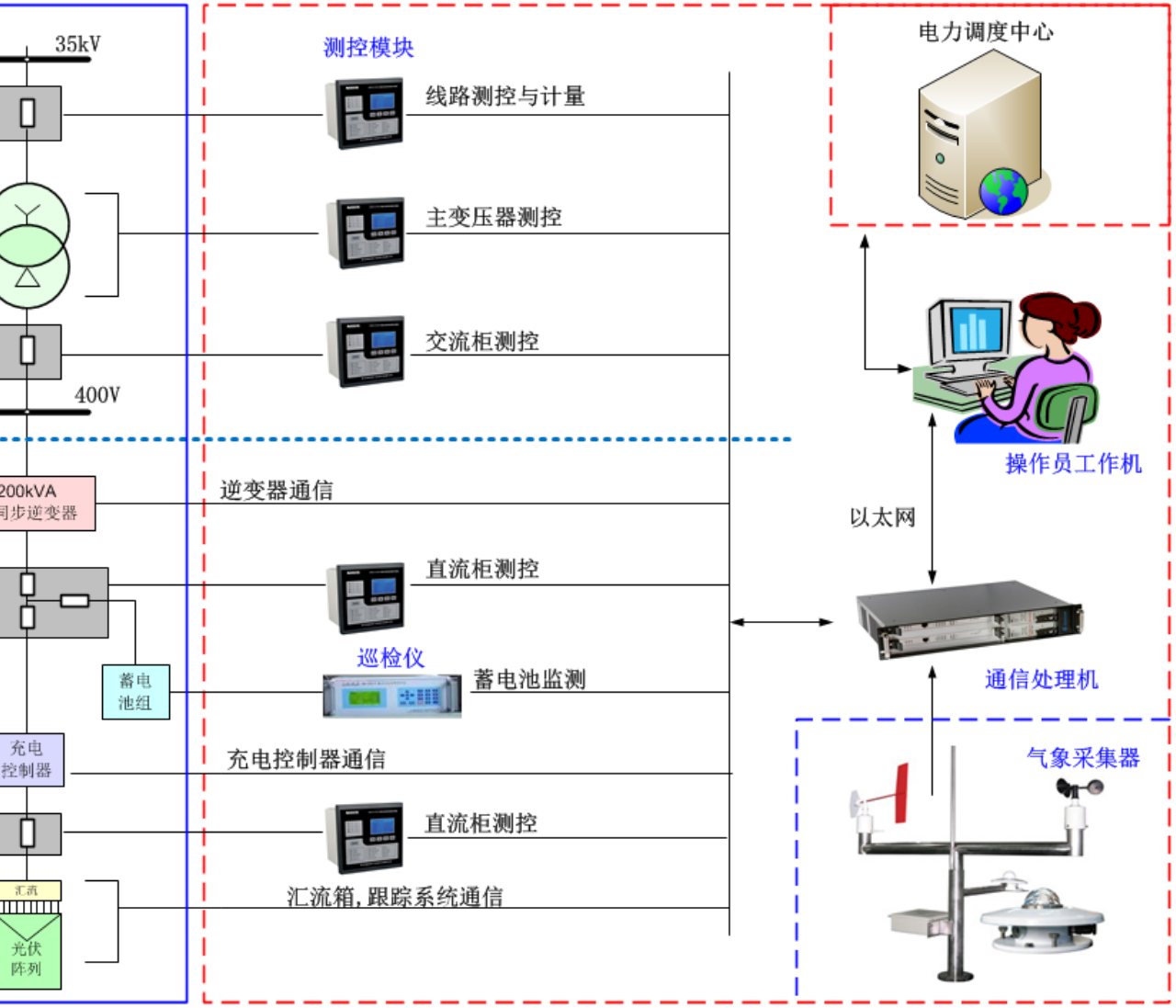

技术方案
Technical solutions

- **监测 Monitoring**
  - —光伏阵列 PV arrays
  - —变流器 inverters
  - —蓄电池状态 states of battery
- **控制 Control**
  - —线路开关动作 Line switches
  - —逆变器功率调节 Power adjustin
  - —自动发电控制 Automatic generation control
- **保护 Protection**
  - —蓄电池过充过放 Over/under charge of battery
  - —线路继电保护 Relay

综自系统关键技术
Key Technology of IAEM

动发电控制技术 Automatic Generation Control

自动发电控制软件

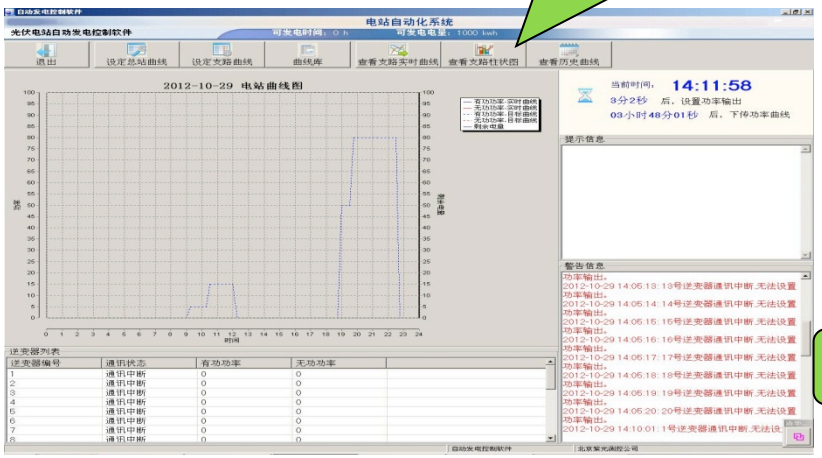

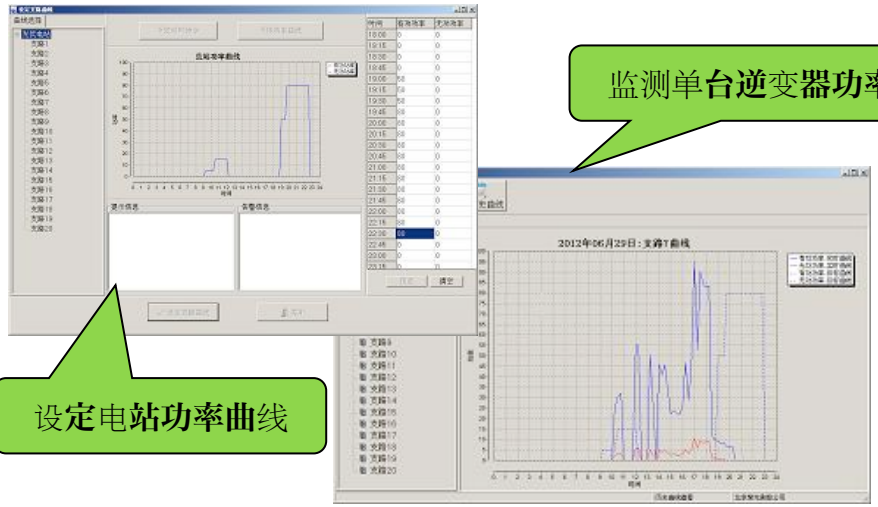

监测单台逆变器功率

设定电站功率曲线

功率调度系统 Power dispatch system

电站测控系统网络结构

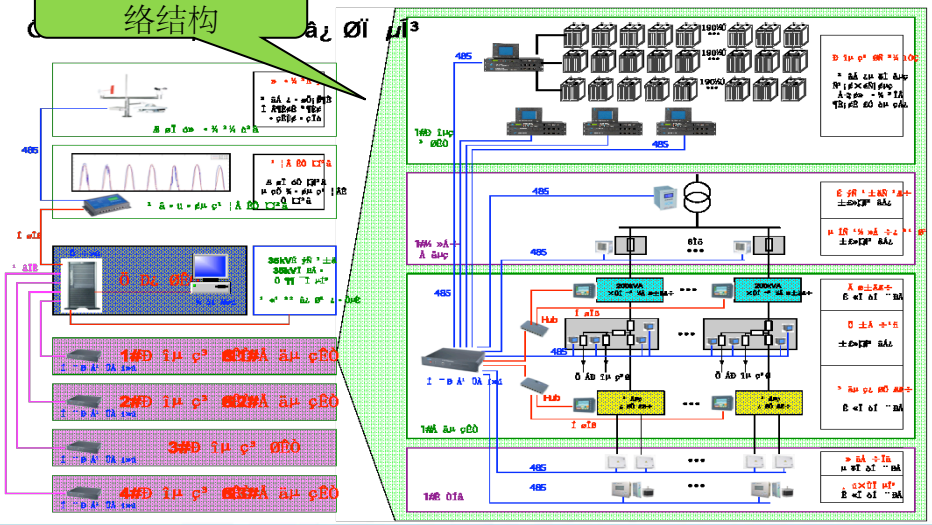

电站测控系统软件

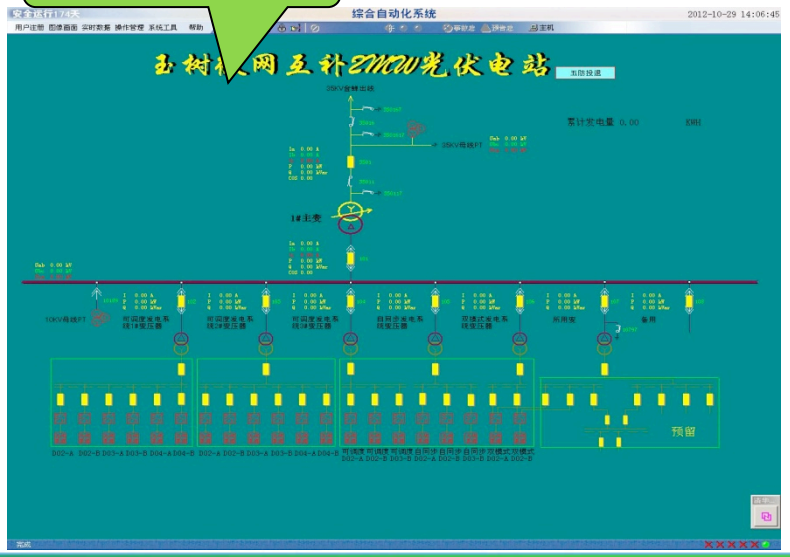

电工所五楼综自系统平台
IAEM platform in lab

气象监测 Meteorological monitoring

蓄电池监测 Battery Monitoring

监控系统 Monitoring System

监控软件 Monitoring Software

玉树现场综自系统
IAEM at PVB station of Yushu

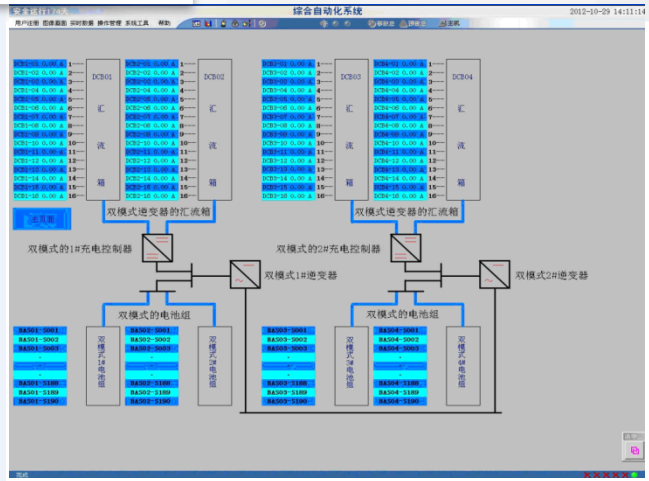

监控界面
Monitoring Interface

2012年，青海省省委书记考察玉树电站综合控制室
Qinghai Provincial Secretary visited in 2012.

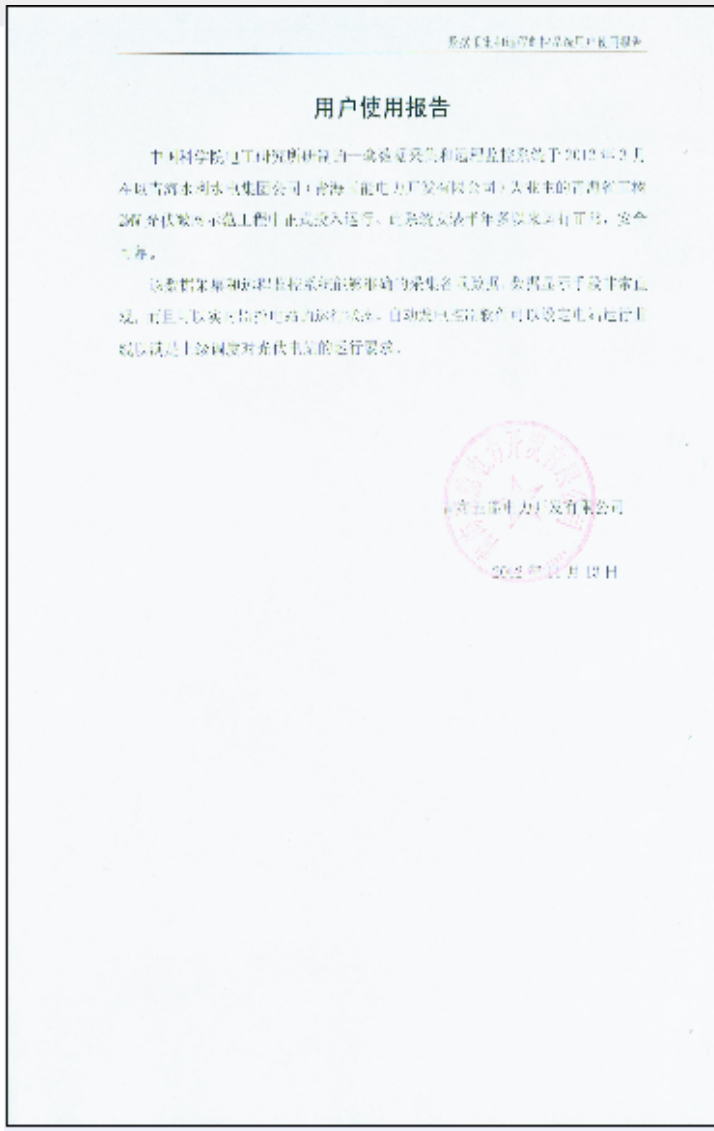

用户使用报告
Using Report

.Conclusion

小水电是在电网末梢或无电地区常用的一种供电方式，但供电能力受水资源制约，枯水季缺电严重，水/光/储互补微电网具有良好的应用潜力。

Small hydro-power is a common supply in weak grid or remote area. But there is electricity shortage in dry season. HPVB-supplied MG has potential in such area.

在玉树水/光/储微电网中，光储电站具有可调度特性，在电网故障时可单独负载，提高了系统充裕性和稳定性，是一种可普遍推广的应用模式。

In Yushu demonstration, PVB station can be scheduled and supply critical load when grid is down, which improves adequacy and stability. This mode is worthy c widely spread.

水/光/储微电网的关键技术需要深入研究，例如控制逆变技术、微网调度策 光储容量配比研究等。

Key technologies of HPVB-supplied MG need further research, such as controller and inverter, schedule strategy, capacity configuration etc.

THANK YOU !

Xu Honghua

Email: hxu@mail.iee.ac.cn

Institute of Electrical Engineering